REGISTER OF WAGE DETERMINATIONS UNDER THE SERVICE CONTRACT ACT
By direction of the Secretary of Labor

U.S. DEPARTMENT OF LABOR
EMPLOYMENT STANDARDS ADMINISTRATION
WAGE AND HOUR DIVISION
WASHINGTON, D.C. 20210

William W. Gross
Director

Division of Wage Determinations

Wage Determination No: 1980-0614
Revision No: 24
Date Of Revision: 06/23/2005

State: Louisiana
Area: Louisiana Statewide

Fringe Benefits Required Follow the Occupational Listing

Employed on service contracts for forestry, land management, the cleaning of public use areas and timber inventory services.

OCCUPATION CODE - TITLE	MINIMUM WAGE RATE
08010 - Brush/Precommercial Thinner	10.65
08040 - Choker Setter	9.80
08070 - Faller/Bucker	12.27
08100 - Fire Lookout	10.65
08130 - Forestry Equipment Operator	13.48
08160 - Forestry/Logging Heavy Equipment Operator	15.58
08190 - Forestry Technician	15.58
08190 - Forestry Truckdriver	15.58
08250 - General Forestry Laborer	9.37
08280 - Nursery Specialist	14.77
08310 - Slash Piler/Burner	10.65
08340 - Tree Climber	11.92
08370 - Tree Planter	8.70
08400 - Tree Planter, Mechanical	8.70

ALL OCCUPATIONS LISTED ABOVE RECEIVE THE FOLLOWING BENEFITS:

HEALTH & WELFARE: $2.87 an hour or $114.80 a week or $497.47 a month

VACATION: 2 weeks paid vacation after 1 year of service with a contractor or successor; and 3 weeks after 10 years. Length of service includes the whole span of continuous service with the present contractor or successor, wherever employed, and with the predecessor contractors in the performance of similar work at the same Federal facility. (Reg. 29 CFR 4.173)

HOLIDAYS: A minimum of ten paid holidays per year: New Year's Day, Martin Luther King Jr.'s Birthday, Washington's Birthday, Memorial Day, Independence Day, Labor Day, Columbus Day, Veterans' Day, Thanksgiving Day, and Christmas Day. (A contractor may substitute for any of the named holidays another day off with pay

in accordance with a plan communicated to the employees involved.) (See 29 CFR 4.174)

** UNIFORM ALLOWANCE **
If employees are required to wear uniforms in the performance of this contract (either by the terms of the Government contract, by the employer, by the state or local law, etc.), the cost of furnishing such uniforms and maintaining (by laundering or dry cleaning) such uniforms is an expense that may not be borne by an employee where such cost reduces the hourly rate below that required by the wage determination. The Department of Labor will accept payment in accordance with the following standards as compliance:
The contractor or subcontractor is required to furnish all employees with an adequate number of uniforms without cost or to reimburse employees for the actual cost of the uniforms. In addition, where uniform cleaning and maintenance is made the responsibility of the employee, all contractors and subcontractors subject to this wage determination shall (in the absence of a bona fide collective bargaining agreement providing for a different amount, or the furnishing of contrary affirmative proof as to the actual cost), reimburse all employees for such cleaning and maintenance at a rate of $3.35 per week (or $.67 cents per day). However, in those instances where the uniforms furnished are made of "wash and wear" materials, may be routinely washed and dried with other personal garments, and do not require any special treatment such as dry cleaning, daily washing, or commercial laundering in order to meet the cleanliness or appearance standards set by the terms of the Government contract, by the contractor, by law, or by the nature of the work, there is no requirement that employees be reimbursed for uniform maintenance costs.
** NOTES APPLYING TO THIS WAGE DETERMINATION **
Under the policy and guidance contained in All Agency Memorandum No. 159, the Wage and Hour Division does not recognize, for section 4(c) purposes, prospective wage rates and fringe benefit provisions that are effective only upon such contingencies as "approval of Wage and Hour, issuance of a wage determination, incorporation of the wage determination in the contract, adjusting the contract price, etc." (The relevant CBA section) in the collective bargaining agreement between (the parties) contains contingency language that Wage and Hour does not recognize as reflecting "arm's length negotiation" under section 4(c) of the Act and 29 C.F.R. 5.11(a) of the regulations. This wage determination therefore reflects the actual CBA wage rates and fringe benefits paid under the predecessor contract.
Source of Occupational Title and Descriptions:
The duties of employees under job titles listed are those described in the "Service Contract Act Directory of Occupations," Fourth Edition, January 1993, as amended by the Third Supplement, dated March 1997, unless otherwise indicated. This publication may be obtained from the Superintendent of Documents, at 202-783-3238, or by writing to the Superintendent of Documents, U.S. Government Printing Office, Washington, D.C. 20402. Copies of specific job descriptions may also be obtained from the appropriate contracting officer.
REQUEST FOR AUTHORIZATION OF ADDITIONAL CLASSIFICATION AND WAGE RATE {Standard Form 1444 (SF 1444)}
Conformance Process:
The contracting officer shall require that any class of service employee which is not listed herein and which is to be employed under the contract (i.e., the work to be performed is not performed by any classification listed in the wage determination), be classified by the contractor so as to provide a reasonable relationship (i.e., appropriate level of skill comparison) between such unlisted classifications and the classifications listed in the wage determination. Such conformed classes of employees shall be paid the monetary wages and furnished

the fringe benefits as are determined. Such conforming process shall be initiated by the contractor prior to the performance of contract work by such unlisted class(es) of employees. The conformed classification, wage rate, and/or fringe benefits shall be retroactive to the commencement date of the contract. (See Section 4.6 (C)(vi)) When multiple wage determinations are included in a contract, a separate SF 1444 should be prepared for each wage determination to which a class(es) is to be conformed.

The process for preparing a conformance request is as follows:

1) When preparing the bid, the contractor identifies the need for a conformed occupation(s) and computes a proposed rate(s).

2) After contract award, the contractor prepares a written report listing in order proposed classification title(s), a Federal grade equivalency (FGE) for each proposed classification(s), job description(s), and rationale for proposed wage rate(s), including information regarding the agreement or disagreement of the authorized representative of the employees involved, or where there is no authorized representative, the employees themselves. This report should be submitted to the contracting officer no later than 30 days after such unlisted class(es) of employees performs any contract work.

3) The contracting officer reviews the proposed action and promptly submits a report of the action, together with the agency's recommendations and pertinent information including the position of the contractor and the employees, to the Wage and Hour Division, Employment Standards Administration, U.S. Department of Labor, for review. (See section 4.6(b)(2) of Regulations 29 CFR Part 4).

4) Within 30 days of receipt, the Wage and Hour Division approves, modifies, or disapproves the action via transmittal to the agency contracting officer, or notifies the contracting officer that additional time will be required to process the request.

5) The contracting officer transmits the Wage and Hour decision to the contractor.

6) The contractor informs the affected employees.

Information required by the Regulations must be submitted on SF 1444 or bond paper.

When preparing a conformance request, the "Service Contract Act Directory of Occupations" (the Directory) should be used to compare job definitions to insure that duties requested are not performed by a classification already listed in the wage determination. Remember, it is not the job title, but the required tasks that determine whether a class is included in an established wage determination. Conformances may not be used to artificially split, combine, or subdivide classifications listed in the wage determination.

□

DSR No:103-05-002
Galvez Canal
St Tammany Parish

Debris Removal

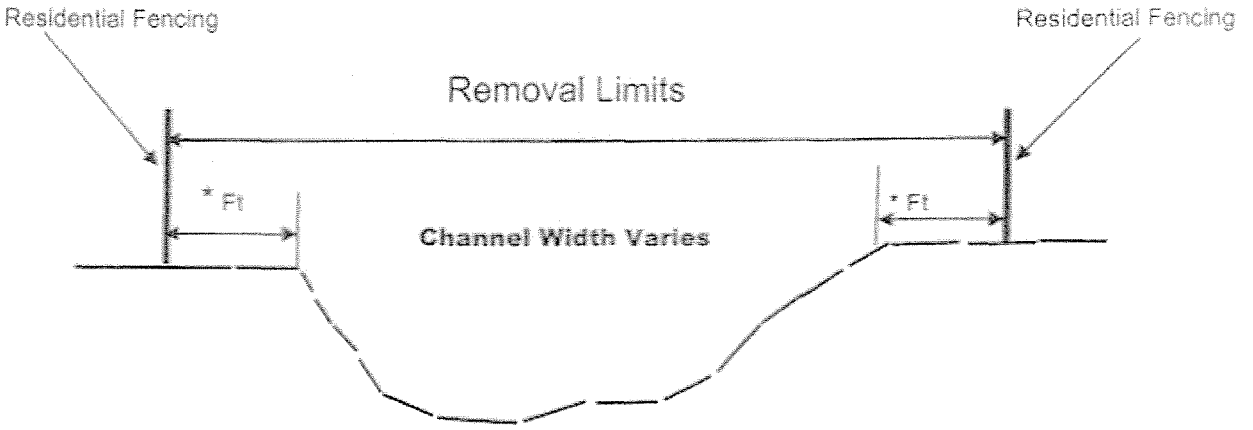

Typical Section Not to Scale

Notice:
48 Hours Before Digging
Call 1-800-272-3020

**Note : City has right of way on both sides and the width varies as residential fenceings borders the right of way on both sides. The contract allows for clearing the right of way up to the fence lines.*
***Exception** it may be possible that trees which were located outside of the the rightaway may have fallen into the right of way these trees will be remove including the stumps which may be located outside of the right of way.*

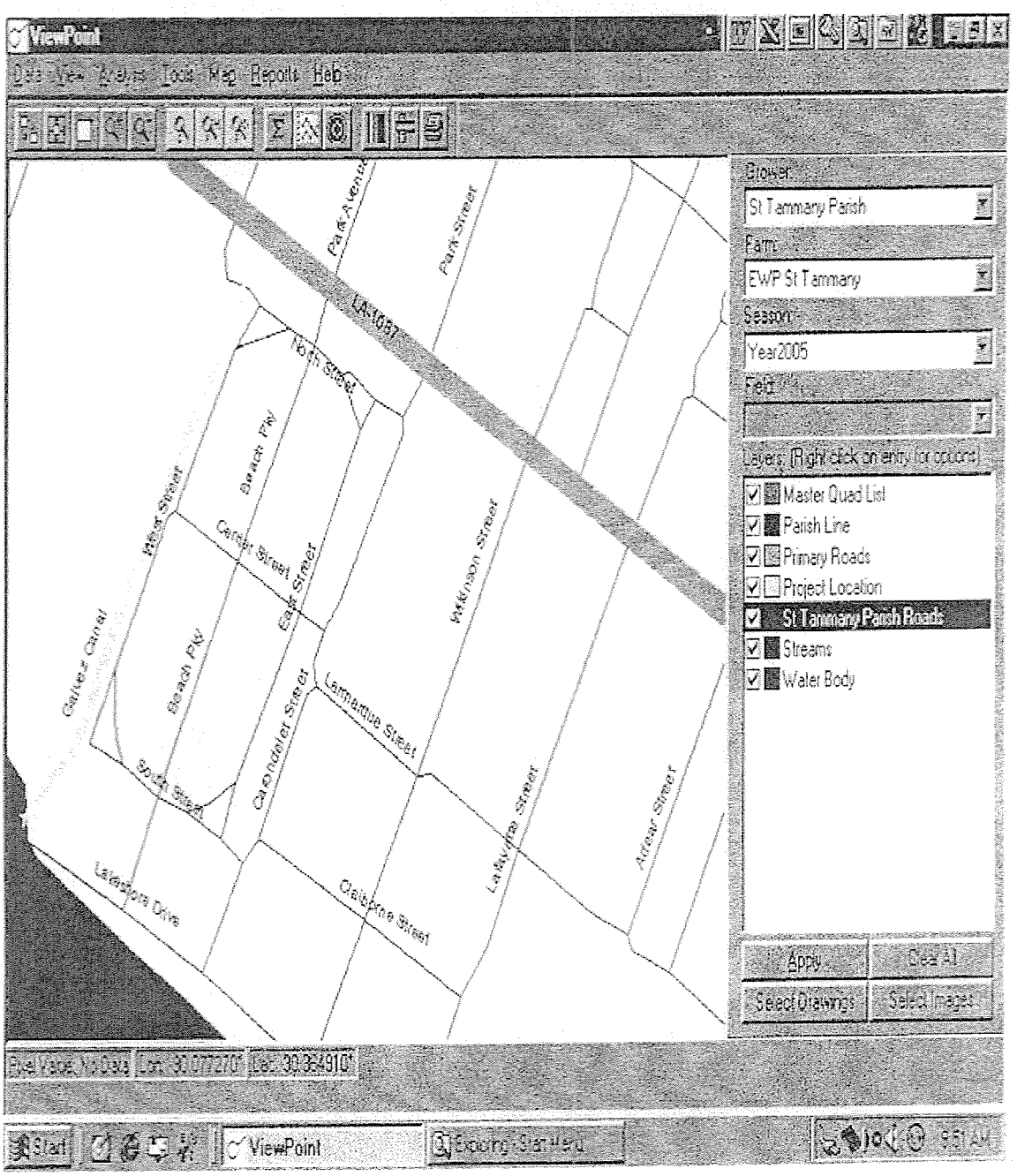
ViewPoint
Data View Analysis Tools Map Reports Help
Grower:
St Tammany Parish
Farm:
EWP St Tammany
Season:
Year2005
Field:
Layers: (Right click on entry for options)
Master Quad List
Parish Line
Primary Roads
Project Location
St Tammany Parish Roads
Streams
Water Body
Apply
Clear All
Select Drawings
Select Images
Park Avenue
Park Street
LA-1087
North Street
Beach Pky
West Street
Center Street
East Street
Wilkinson Street
Galvez Canal
Beach Pky
Carondelet Street
Larmarque Street
South Street
Lafayette Street
Adrear Street
Lakeshore Drive
Claiborne Street
Start
ViewPoint
Exploring - Start Menu

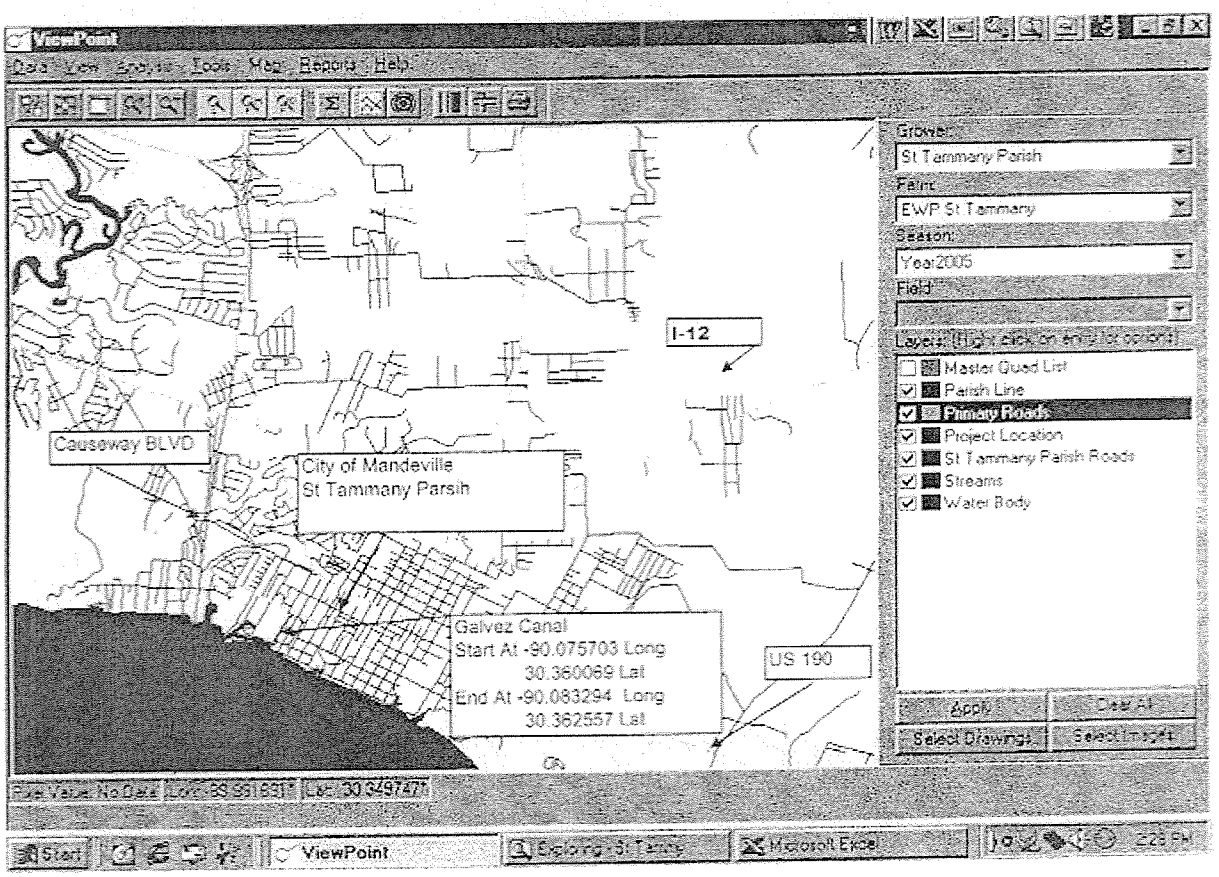
ViewPoint
Grower:
St Tammany Parish
Farm:
EWP St Tammany
Season:
Year2005
Field:
Layers: (Tip: click on entry for options)
Master Quad List
Parish Line
Primary Roads
Project Location
St Tammany Parish Roads
Streams
Water Body
Apply
Clear All
Select Drawings
Select Images
I-12
Causeway BLVD
City of Mandeville
St Tammany Parish
Galvez Canal
Start At -90.075703 Long
30.360069 Lat
End At -90.083294 Long
30.362557 Lat
US 190
Start
ViewPoint
Microsoft Excel

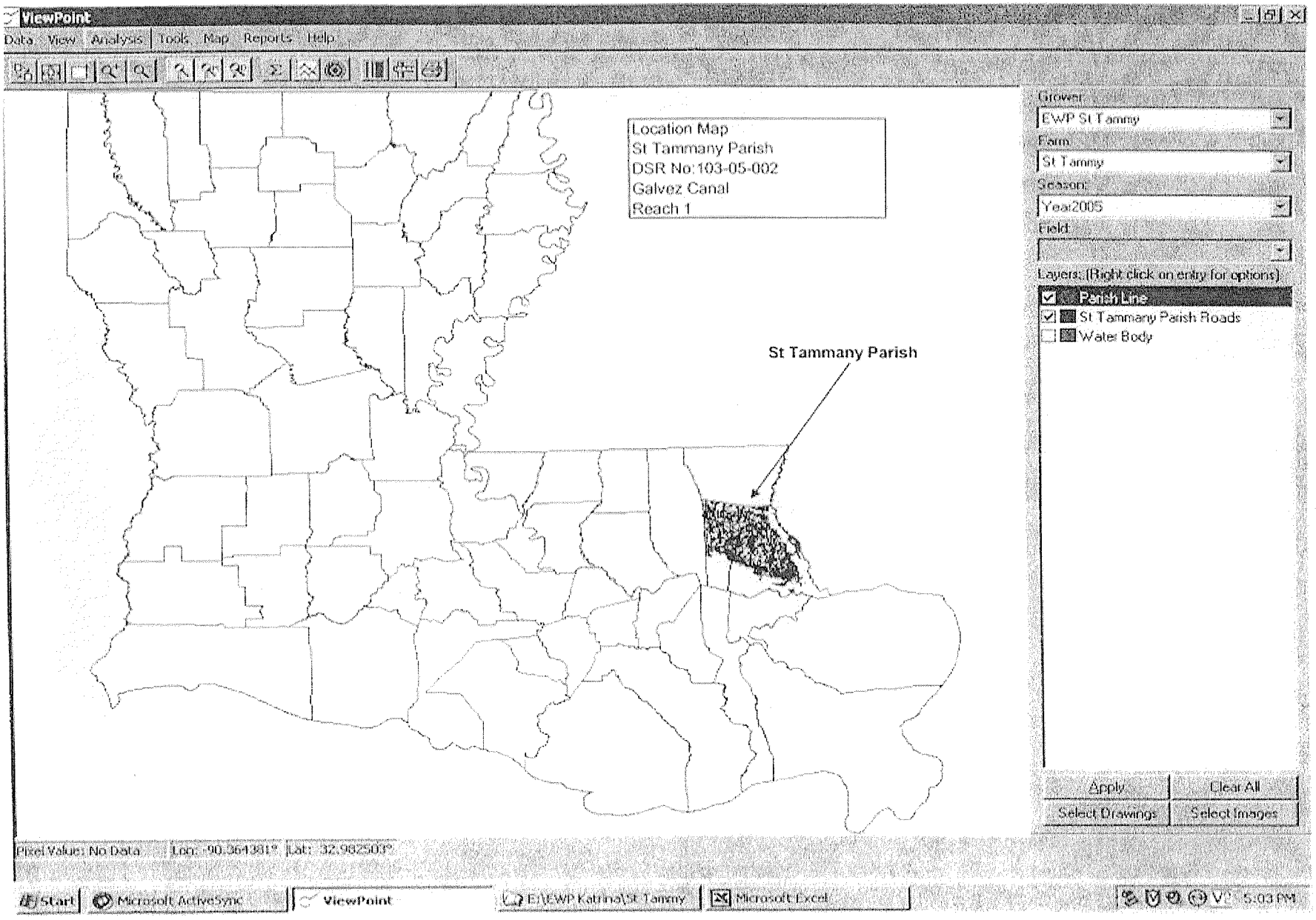
ViewPoint
Data View Analysis Tools Map Reports Help
Location Map
St Tammany Parish
DSR No:103-05-002
Galvez Canal
Reach 1
St Tammany Parish
Grower:
EWP St Tammy
Farm:
St Tammy
Season:
Year2005
Field:
Layers: (Right click on entry for options)
Parish Line
St Tammany Parish Roads
Water Body
Apply
Clear All
Select Drawings
Select Images
Pixel Value: No Data
Start
Microsoft ActiveSync
ViewPoint
E:\EWP Katrina\St Tammy
Microsoft Excel
5:03 PM

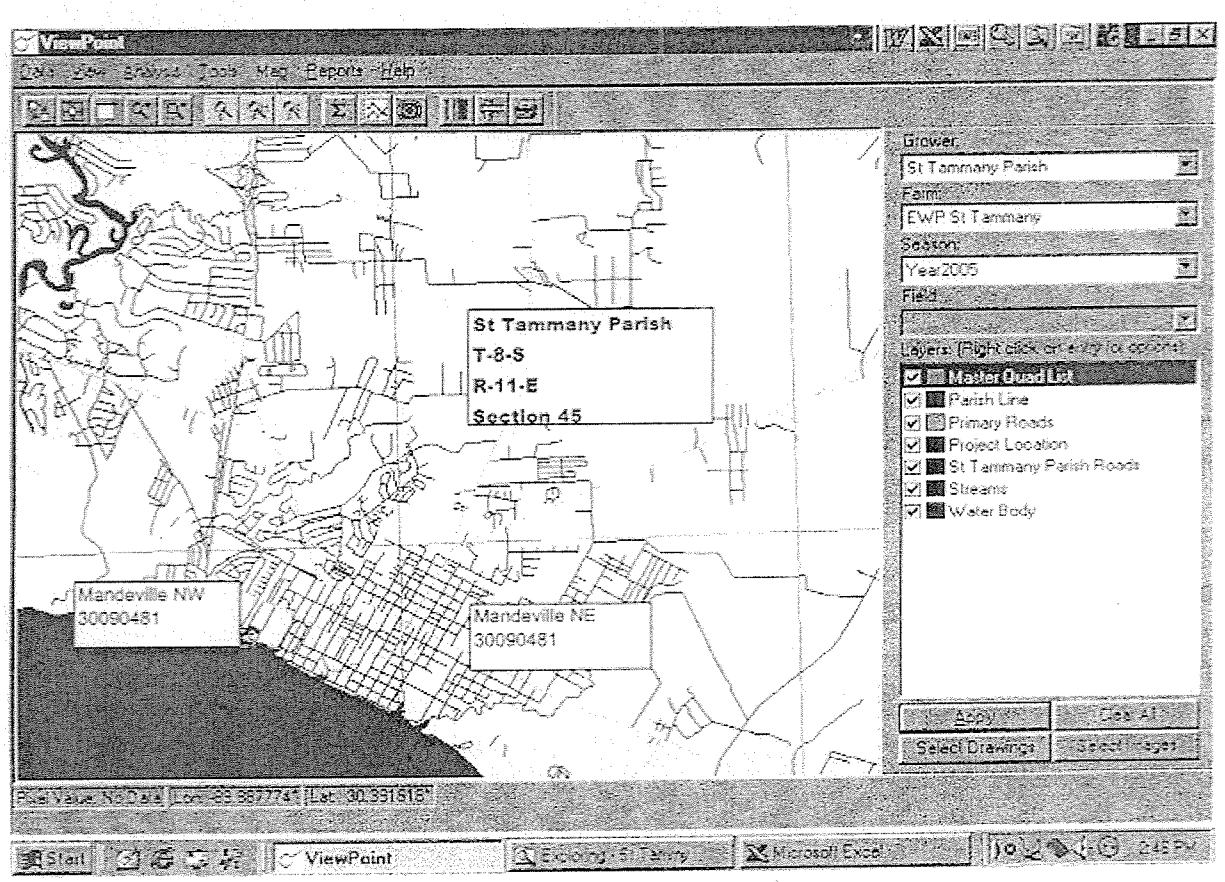
ViewPoint
Grower:
St Tammany Parish
Farm:
EWP St Tammany
Season:
Year2005
Field:
Layers: (Right click on any to zoom to)
Master Quad List
Parish Line
Primary Roads
Project Location
St Tammany Parish Roads
Streams
Water Body
St Tammany Parish
T-8-S
R-11-E
Section 45
Mandeville NW
30090481
Mandeville NE
30090481
Apply
Clear All
Select Drawings
Select Layer
Start
ViewPoint
Microsoft Excel

SOLICITATION/CONTRACT/ORDER FOR COMMERCIAL ITEMS *OFFEROR TO COMPLETE BLOCKS 12, 17, 23, 24, & 30*	1. REQUISITION NUMBER	PAGE 1 OF 19

2. CONTRACT NO.	3. AWARD/EFFECTIVE DATE	4. ORDER NUMBER	5. SOLICITATION NUMBER	6. SOLICITATION ISSUE DATE
NR237-C-05-0018K	16Sept05		RFQ-02-LA-05	09/14/2005

7. FOR SOLICITATION INFORMATION CALL:	a. NAME	b. TELEPHONE NUMBER (No collect calls)	8. OFFER DUE DATE/ LOCAL TIME
	Ralph Broome	(318) 473-7781	09/16/05 4:00 pm

9. ISSUED BY	CODE	10. THIS ACQUISITON IS	11. DELIVERY FOR FOB DESTINATION UNLESS BLOCK IS MARKED	12. DISCOUNT TERMS
USDA-NRCS 3737 Government St. Alexandria, LA 71302		☒ UNRESTRICTED ☐ SET ASIDE: % FOR ☐ SMALL BUSINESS ☐ HUBZONE SMALL BUSINESS ☐ 8(A) NAICS: 237990 SIZE STANDARD: $28.5 million	☐ SEE SCHEDULE ☐ 13a. THIS CONTRACT IS A RATED ORDER UNDER DPAS (15 CFR 700) 13b. RATING 14. METHOD OF SOLICITATION ☒ RFQ ☐ IFB ☐ RFP	

15. DELIVER TO	CODE	16. ADMINISTERED BY	CODE
See Block 9		See Block 9	

17a. CONTRACTOR/ OFFEROR	CODE	FACILITY CODE	18a. PAYMENT WILL BE MADE BY	CODE
			See Block 9	

TELEPHONE NO.

☐ 17b. CHECK IF REMITTANCE IS DIFFERENT AND PUT SUCH ADDRESS IN OFFER

18b. SUBMIT INVOICES TO ADDRESS SHOWN IN BLOCK 18a UNLESS BLOCK BELOW IS CHECKED ☐ SEE ADDENDUM

19. ITEM NO.	20. SCHEDULE OF SUPPLIES/SERVICES	21. QUANTITY	22. UNIT	23. UNIT PRICE	24. AMOUNT
	LARROCK/REID ROAD LAT. (DSR 105-05-003) Contractor shall provide all labor, materials, equipment, transportation & other incidentals required to remove storm-related debris as indicated. FAX OFFER TO (318) 473-7831 prior to date/time shown in Block 8. *(Use Reverse and/or Attach Additional Sheets as Necessary)*				

25. ACCOUNTING AND APPROPRIATION DATA

26. TOTAL AWARD AMOUNT *(For Govt. Use Only)*

☐ 27a. SOLICITATION INCORPORATES BY REFERENCE FAR 52.212-1, 52.212-4, FAR 52.212-3 AND 52.212-5 ARE ATTACHED. ADDENDA ☐ ARE ☒ ARE NOT ATTACHED

☐ 27b. CONTRACT/PURCHASE ORDER INCORPORATES BY REFERENCE FAR 52.212-4. FAR 52.212-5 IS ATTACHED. ADDENDA ☐ ARE ☒ ARE NOT ATTACHED

☒ 28. CONTRACTOR IS REQUIRED TO SIGN THIS DOCUMENT AND RETURN 1 COPIES TO ISSUING OFFICE. CONTRACTOR AGREES TO FURNISH AND DELIVER ALL ITEMS SET FORTH OR OTHERWISE IDENTIFIED ABOVE AND ON ANY ADDITIONAL SHEETS SUBJECT TO THE TERMS AND CONDITIONS SPECIFIED HEREIN.

☐ 29. AWARD OF CONTRACT: REF _____ OFFER DATED _____. YOUR OFFER ON SOLICITATION (BLOCK 5), INCLUDING ANY ADDITIONS OR CHANGES WHICH ARE SET FORTH HEREIN, IS ACCEPTED AS TO ITEMS:

30a. SIGNATURE OF OFFEROR/CONTRACTOR	31a. UNITED STATES OF AMERICA *(SIGNATURE OF CONTRACTING OFFICER)*
Daniel York	

30b. NAME AND TITLE OF SIGNER *(Type or print)*	30c. DATE SIGNED	31b. NAME OF CONTRACTING OFFICER *(Type or print)*	31c. DATE SIGNED
Dirt Works/Daniel York	9/16/05	CHARLES E PHILLIPS JR	16Sept05

AUTHORIZED FOR LOCAL REPRODUCTION
PREVIOUS EDITION IS NOT USABLE

STANDARD FORM 1449 (REV. 4/2002)
Prescribed by GSA - FAR (48 CFR) 53.212

PART I - THE SCHEDULE

SECTION B - SUPPLIES OR SERVICES AND PRICES/COSTS

SCHEDULE OF PRICES
Debris Removal
LaRock/Reid Road Lateral
DSR 105-05-0003

Item No.	Supplies/Services	Qty.	Unit	Unit Price	Amount
1.	Debris Removal LaRock/Reid Rd. Lateral DSR #105-05-0003	1	Job	Lump Sum	$16,000

Price includes all labor, materials, equipment, transporation, and incidentals necessary to mobilize and dispose of debris from areas indicated on drawings/maps.

AWARD RESTRICTION (AUG 1987 NRCS, AMB)
One award for the aggregate of all Items will be made under this solicitation.

SECTION C - DESCRIPTION/SPECIFICATIONS/WORK STATEMENT

C.1 AGAR 452.211-72 STATEMENT OF WORK/SPECIFICATIONS (FEB 1988)

The Contractor shall furnish the necessary personnel, material, equipment, services and facilities (except as otherwise specified), to perform the Statement of Work/Specifications referenced in Section J.

C.2 AGAR 452.211-73 ATTACHMENTS TO STATEMENT OF WORK/SPECIFICATIONS (FEB 1988)

The attachments to the Statement of Work/Specifications listed in Section J are hereby made part of this solicitation and any resultant contract.

SECTION E - INSPECTION AND ACCEPTANCE

E.1 52.252-2 CLAUSES INCORPORATED BY REFERENCE (JUN 1988)

This contract incorporates one or more clauses by reference, with the same force and effect as if they were given in full text. Upon request, the Contracting Officer will make their full text available. Also, the full text of a clause may be accessed electronically at this/these address(es): http://www.arnet.gov/far/

I. FEDERAL ACQUISITION REGULATION (48 CFR CHAPTER 1) CLAUSES

NUMBER	TITLE	DATE
52.246-4	INSPECTION OF SERVICES-FIXED-PRICE	AUG 1996

SECTION F - DELIVERIES OR PERFORMANCE

F.1 52.252-2 CLAUSES INCORPORATED BY REFERENCE (JUN 1988)

This contract incorporates one or more clauses by reference, with the same force and effect as if they were given in full text. Upon request, the Contracting Officer will make their full text available. Also, the full text of a clause may be accessed electronically at this/these address(es): http://www.arnet.gov/far/

I. FEDERAL ACQUISITION REGULATION (48 CFR CHAPTER 1) CLAUSES

NUMBER	TITLE	DATE
52.211-18	VARIATION IN ESTIMATED QUANTITY	APR 1984

F.2 AGAR 452.211-74 PERIOD OF PERFORMANCE (FEB 1988)

The period of performance of this contract is ten (10) days from the day following the Contractor's receipt of notice of contract award.

SECTION G - CONTRACT ADMINISTRATION DATA

G.1 NRCSAR 4I-52.232-70 DESIGNATED PAYMENT OFFICE CONTACT POINT (NRCS, AMB, AUG 1989)

The contact point described below coordinates the issuance of payments under this contract. If payment is not received within 5 days after the due date specified in the contract, contact the payment office designated below for information on when payment will be made.

Ralph Broome
USDA-Natural Resources Conservation Service
3737 Government Street
Alexandria, LA 71302

Telephone: (318) 473-7781

If questions arise on the amount paid, contact the Contracting Officer at the number or address shown in the contract.

PART II - CONTRACT CLAUSES

SECTION I - CONTRACT CLAUSES

I.1 52.252-2 CLAUSES INCORPORATED BY REFERENCE (JUN 1988)

This contract incorporates one or more clauses by reference, with the same force and effect as if they were given in full text. Upon request, the Contracting Officer will make their full text available. Also, the full text of a clause may be accessed electronically at this/these address(es): http://www.arnet.gov/far/

I. FEDERAL ACQUISITION REGULATION (48 CFR CHAPTER 1) CLAUSES

	NUMBER	TITLE	DATE
	52.202-1	DEFINITIONS	JUL 2004
	52.204-7	CENTRAL CONTRACTOR REGISTRATION	OCT 2003
**	52.209-6	PROTECTING THE GOVERNMENT'S INTEREST WHEN SUBCONTRACTING WITH CONTRACTORS DEBARRED, SUSPENDED, OR PROPOSED FOR DEBARMENT	JUL 1995
	52.219-6	NOTICE OF TOTAL SMALL BUSINESS SET-ASIDE	JUN 2003
****	52.222-1	NOTICE TO THE GOVERNMENT OF LABOR DISPUTES	FEB 1997
	52.222-3	CONVICT LABOR	JUN 2003
*	52.222-21	PROHIBITION OF SEGREGATED FACILITIES	FEB 1999
*	52.222-26	EQUAL OPPORTUNITY	APR 2002
**	52.222-35	EQUAL OPPORTUNITY FOR SPECIAL DISABLED VETERANS, VETERANS OF THE VIETNAM ERA, AND OTHER ELIGIBLE VETERANS	DEC 2001
*	52.222-36	AFFIRMATIVE ACTION FOR WORKERS WITH DISABILITIES	JUN 1998
**	52.222-37	EMPLOYMENT REPORTS ON SPECIAL DISABLED VETERANS, VETERANS OF THE VIETNAM ERA, AND OTHER ELIGIBLE VETERANS	DEC 2001
	52.222-41	SERVICE CONTRACT ACT OF 1965, AS AMENDED	MAY 1989
*****	52.223-5	POLLUTION PREVENTION AND RIGHT-TO-KNOW INFORMATION	AUG 2003
***	52.223-6	DRUG FREE WORKPLACE	MAY 2001
	52.225-13	RESTRICTIONS ON CERTAIN FOREIGN PURCHASES	DEC 2003
	52.232-1	PAYMENTS	APR 1984
	52.232-8	DISCOUNTS FOR PROMPT PAYMENT	FEB 2002
	52.232-11	EXTRAS	APR 1984
	52.232-23	ASSIGNMENT OF CLAIMS	JAN 1986
	52.232-25	PROMPT PAYMENT	OCT 2003
	52.232-33	PAYMENT BY ELECTRONIC FUNDS TRANSFER--CENTRAL CONTRACTOR REGISTRATION	OCT 2003

52.233-1	DISPUTES	JUL 2002
	ALTERNATE I	DEC 1991
52.233-3	PROTEST AFTER AWARD	AUG 1996
52.236-7	PERMITS AND RESPONSIBILITIES	NOV 1991
52.243-1	CHANGES - FIXED-PRICE	AUG 1987
	Alternate I (APR 1984)	
52.249-1	TERMINATION FOR CONVENIENCE OF THE GOVERNMENT (FIXED PRICE)(SHORT FORM)	APR 1984
52.249-8	DEFAULT (FIXED PRICE SUPPLY AND SERVICE	APR 1984
52.253-1	COMPUTER GENERATED FORMS	JAN 1991

(* Applicable if contract award exceeds $10,000)
(** Applicable if contract award exceeds $25,000)
(*** Applicable if contract is awarded to an individual)
(**** Applicable to Emergency Watershed Protection Projects)
(***** Applicable when performance is on a Federal Facility)

I.2 52.222-42 STATEMENT OF EQUIVALENT RATES FOR FEDERAL HIRES (MAY 1989)

In compliance with the Service Contract Act of 1965, as amended, and the regulations of the Secretary of Labor (29 CFR Part 4), this clause identifies the classes of service employees expected to be employed under the contract and states the wages and fringe benefits payable to each if they were employed by the contracting agency subject to the provisions of 5 U.S.C. 5341 or 5332. THIS STATEMENT IS FOR INFORMATION ONLY: IT IS NOT A WAGE DETERMINATION

Employee Class Monetary Wage - Fringe Benefits

I.3 52.244-6 SUBCONTRACTS FOR COMMERCIAL ITEMS (JUL 2004)

(a) Definitions. As used in this clause-
"Commercial item" has the meaning contained in Federal Acquisition Regulation 2.101, Definitions.
"Subcontract", includes a transfer of commercial items between divisions, subsidiaries, or affiliates of the Contractor or subcontractor at any tier.

(b) To the maximum extent practicable, the Contractor shall incorporate, and require its subcontractors at all tiers to incorporate, commercial items or nondevelopmental items as components of items to be supplied under this contract.

(c)(1) The Contractor shall insert the following clauses in subcontracts for commercial items:
(i) 52.219-8, Utilization of Small Business Concerns (MAY 2004)(15 U.S.C. 637(d)(2) and (3)), in all subcontracts that offer further subcontracting opportunities. If the subcontract (except subcontracts to small business concerns) exceed $500,000 ($1,000,000 for construction of any public facility), the subcontractor must include 52.219-8 in lower tier subcontracts that offer subcontracting opportunities.
(ii) 52.222-26, Equal Opportunity (APR 2002)(E.O. 11246).

(iii) 52.222-35, Equal Opportunity for Special Disabled Veterans, Veterans of the Vietnam Era, and Other Eligible Veterans (DEC 2001)(38 U.S.C. 4212(a)).

(iv) 52.222-36, Affirmative Action for Workers with Disabilities (JUN 1998)(29 U.S.C. 793).

(v) 52.247-64, Preference for Privately Owned U.S. Flag Commercial Vessels (APR 2003)(46 U.S.C. Appx 1241 and 10 U.S.C. 2631) (flow down required in accordance with paragraph (d) of FAR clause 52.247-64).

(2) While not required, the Contractor may flow down to subcontracts for commercial items a minimal number of additional clauses necessary to satisfy its contractual obligations.

NATURAL RESOURCES CONSERVATION SERVICE
SUPPLEMENT TO OSHA PARTS 1910 AND 1926
CONSTRUCTION INDUSTRY STANDARDS AND
INTERPRETATIONS

The contractor shall comply with OSHA (Occupational Safety and Health Administration) Parts 1910 and 1926, Construction Industry Standards and Interpretations, and with this supplement.

Requests for variances or waivers from this supplement are to be made to the contracting officer in writing supported by evidence that every reasonable effort has been made to comply with the contractual requirements. A written request for a wavier or a variance shall include--

(1) Specific reference to the provision or standard in question;
(2) An explanation as to why the wavier is considered justified; and
(3) The contractor's proposed alternative, including technical drawings, materials, or equipment specifications needed to enable the contracting officer to render a decision. No wavier or variance will be approved if it endangers any person. The contractor shall not proceed under any requested revision of a provision until the contracting officer has given written approval. The contractor is to hold and save harmless the Soil Conservation Service from any claims or causes of action whatsoever resulting from the contractor or subcontractors proceeding under a wavier or

approved variance.

Copies of OSHA Parts 1910 and 1926, Construction Industry Standards and Interpretations, may be obtained from:

Superintendent of Documents
U. S. Government Printing Office
Washington, DC 20402

NATURAL RESOURCES CONSERVATION SERVICE
SUPPLEMENT TO OSHA PARTS 1910 AND 1926
CONSTRUCTION INDUSTRY STANDARDS AND
INTERPRETATIONS

GENERAL CONTRACTOR REQUIREMENTS

1.1 SAFETY PROGRAM. Each contractor is to demonstrate that he or she has facilities for conducting a safety program commensurate with the work under contract. The contractor is to submit in writing a proposed comprehensive safety program to the contracting officer for approval before the start of construction operations. The program is to specifically state what provision the contractor proposes to take for the health and safety of all employees, including subcontractors and rental equipment operators. The program shall be site specific and provide details relevant to the work to be done, the hazards associated with the work, and the actions that will be necessary to minimize the identified hazards.

1.2 PRECONSTRUCTION SAFETY MEETING. Representatives for the contractor are to meet with the contracting officer (CO) or the CO's representative before the start of construction to discuss the safety program and the implementation of all health and safety standards pertinent to the work under this contract.

1.3 JOINT SAFETY POLICY COMMITTEE. The contractor or designated onsite representative is to participate in monthly meetings of a Joint Safety Policy Committee, composed of Soil Conservation Service and contractor supervisory personnel. At these meetings the contractors project manager and the contracting officer will review the effectiveness of the contractor's safety effort, resolve current health and safety problems, and coordinate safety activities for upcoming work.

1.4 SAFETY PERSONNEL. Each contractor is to designate a competent supervisory employee satisfactory to the contracting officer to administer the safety program.

1.5 SAFETY MEETINGS. A minimum of one "one-on-the-job" or "toolbox" safety meeting is to be conducted each week by all field supervisors or foremen and attended by mechanics and all construction personnel at the job site. The contractor is to also conduct regularly scheduled supervisory safety meetings at least monthly for all levels of job supervision.

1.6 SAFETY INSPECTION. The contractor shall perform frequent and regular safety inspections of the job site, materials, and equipment, and shall correct deficiencies.

1.7 FIRST AID TRAINING. Every contractor foreman's work crew must include an employee who has a current first aid certificate from the Mine Safety and Health Administration, American Red Cross, or other state-approved organization.

1.8 REPORTS. Each contractor is to maintain an accurate record of all job-related deaths, diseases, or disabling injuries. The records shall be maintained in a manner approved by the contracting officer. A copy of all reports is to be provided to the contracting officer. All fatal or serious injuries are to be reported immediately to the contracting officer, and every assistance is to be given in the investigation of the incident, including submission of a comprehensive narrative report to the contracting officer. Other occurrences with serious accident potential, such as equipment failures, slides, and cave-ins, must also be reported immediately. The contractor is to assist and cooperate fully with the contracting officer in conducting accident investigations. The contracting officer is to be furnished all information and data pertinent to investigation of an accident.

1.9 CERTIFICATION OF INSURANCE. Contractors are to provide the contracting officer or his or her representative with certificates of insurance before the start of operations indicating full compliance with State Worker's Compensation statues.

FIRST AID AND MEDICAL FACILITIES

2.1 FIRST AID KITS. A first aid kit approved by the American Red Cross is to be provided at accessible, well-identified locations at the ratio of at least one kit for each 25 employees. The first aid kits are to be moisture proof and dust tight, and the contents of the kits are to be replenished as used or as they become ineffective or outdated.

2.2 EMERGENCY FIRST AID. At least one employee certified to administer emergency first aid must be available for each shift and duly designated by the contractor to care for injured employees. The names of the certified employees shall be posted at the job site.

2.3 COMMUNICATION AND TRANSPORTATION. Prior to the start of work, the contractor is to make necessary arrangements for prompt and dependable communications, transportation, and medical care for injured employees.

At least one stretcher and two blankets shall be readily available for transporting injured employees.

2.4 FIRST AID AND MEDICAL REPORTS. The contractor is to maintain a record system for first aid and medical treatment on the job site. Such reports are to be readily available to the contracting officer and are to include:

(a) A daily treatment log listing chronologically all persons treated for occupational injuries and illness;

(b) Cumulative record of injury for each individual;

(c) Monthly statistical records of occupational injuries, classified by type and nature of injury; and

(d) Required records for worker's compensation.

2.5 SIGNS AND DIRECTIONAL MARKINGS. Adequate identification and directional markers are to be provided to readily denote the location of all first aid stations.

2.6 EMERGENCY LISTING. A listing of telephone numbers and addresses of doctor, rescue squad, hospital, police, and fire departments is to be provided at all first aid locations.

PHYSICAL QUALIFICATION OF EMPLOYEES

3.1 GENERAL REQUIREMENTS. Persons employed throughout the contract are to be physically qualified to perform their assigned duties. Employees must not knowingly be permitted or required to work while their ability or alertness is impaired by fatigue, illness, or any other reason that may jeopardize themselves or others.

3.2 HOIST OPERATIONS. Operators of cranes, cableways, and other hoisting equipment shall be examined annually by a physician and provided with a certification stating that they are physically qualified to safely operate hoisting equipment. The contractor is to submit a copy of each certification to the contracting officer.

3.3 HEAVY EQUIPMENT OPERATORS. It is recommended that operators of trucks and heavy construction equipment be given physical examinations to determine if they are physically qualified to perform their assigned work without endangering themselves or others.

3.4 MOTOR VEHICLE OPERATORS. Operators of motor vehicles engaged primarily in the transportation of personnel are to be 18 years of age or older and have a valid state operator's permit or license for the equipment being operated. The operators must have passed a physical examination administered by a licensed physician within the past year showing that they are physically qualified to operate vehicles safely.

PERSONAL PROTECTIVE EQUIPMENT

4.1 HARDHAT AREAS. The entire job site, with the exception of offices, shall be considered a hardhat area. All personal entering the area are, without exception, required to wear hardhats. The contractor shall provide hardhats for visitors entering hardhat areas.

4.1.1 LABELS Hardhats shall bear a manufacturer's label indicating design compliance with the appropriate ANSI (American National Standards Institute) standard.

4.2 POSTING. Signs at least three by four feet worded as follows with red letters (minimum six inches high) and white background shall be erected at access points to designated hardhat areas:

CONSTRUCTION AREA--HARDHATS REQUIRED
BEYOND THIS POINT

These signs are to be furnished and installed by the contractor at entries to shops, construction yards, and job access points.

4.3 SAFETY GOGGLES (DRILLERS)

4.3.1 DRILLERS AND HELPERS. Drillers and helpers operating pneumatic rock drills must wear protective safety goggles.

MACHINERY AND MECHANIZED EQUIPMENT

5.1 SAFE CONDITION. Before any machinery or mechanized equipment is initially used on the job, it must be inspected and tested by qualified personnel and determined to be in safe operating condition and appropriate for the intended use. Operators shall inspect their equipment prior to the beginning of each shift. Any deficiencies or defects shall be corrected prior to using the equipment. Safety equipment, such as seatbelts, installed on machinery is to be used by equipment operators.

5.2 TAGGING AND LOCKING. The controls of power-driven equipment under repair are to be locked. An effective lockout and tagging procedure is to be established, prescribing specific responsibilities and safety procedures to be followed by the person or persons performing repair work.

5.3 HAUL ROADS FOR EQUIPMENT

5.3.1 ROAD MAINTENANCE. The contractor shall maintain all roadways, including haul roads and access roads, in a safe condition so as to eliminate or control dust and ice hazards. Wherever dust is a hazard, adequate dust-laying equipment shall be available at the job site and utilized to control the dust.

5.3.2 SINGLE-LANE HAUL ROADS. Single-lane haul roads with two-way traffic shall have adequate turnouts. Where turnouts are not practical, a traffic control system shall be provided to prevent accidents.

5.3.3 TWO-WAY HAUL ROADS. On two-way roads,

arrangements are to be such that vehicles travel on the right side wherever possible. Signs and traffic control devices are to be employed to indicate clearly any variations from a right-hand traffic pattern. The road shall be wide enough to permit safe passage of opposing traffic, considering the type of hauling equipment used.

5.3.4 DESIGN AND CONSTRUCTION OF HAUL ROADS. Haul road design criteria and drawings, if requested by the contracting officer, are to be submitted for approval prior to road construction. Sustained grades shall not exceed 12 percent and all curves shall have open-sight line with as great a radius as practical. All roads shall be posed with curve signs and maximum speed limits that will permit the equipment to be stopped within one-half the minimum sight distance.

5.3.5. OPERATORS. Machinery and mechanized equipment shall be operated only by authorized qualified persons.

5.3.6 RIDING ON EQUIPMENT. Riding on equipment by unauthorized personnel is prohibited. Seating and safety belts shall be provided for the operator and all passengers.

5.3.7. GETTING ON OR OFF EQUIPMENT. Getting on or off equipment while the equipment is in motion is prohibited.

5.3.8. HOURS OF OPERATION. Except in emergencies, an equipment operator shall not operate any mobile or hoisting equipment for more than 12 hours without an eight hour rest interval away from the job.

5.4. POWER CRANES AND HOISTS (TRUCK CRANES, CRAWLER CRANES, TOWER CRANES, GANTRY CRANES, HAMMERHEAD CRANES, DERRICKS, CABLEWAYS, AND HOISTS).

5.4.1 PERFORMANCE TEST. Before initial onsite operation, at 12-month intervals, and after major repairs or modification, power cranes, derricks, cableways, and hoists must satisfactorily complete a performance test to demonstrate the equipment's ability to safely handle and maneuver the rated loads. The tests shall be conducted in the presence of a representative of the contracting officer. Test data shall be recorded and a copy furnished the contracting officer.

5.4.2 PERFORMANCE TEST-POWER CRANES (Crawler mounted, truck mounted, and wheel mounted). The performance test is to be carried out with outriggers set and with a test load weighing 110 percent of the rated capacity when the boom angle is from 30 to 60 above the horizontal. The test is to consist of raising, lowering and braking the load and rotating the test load through 360 at the specified boom angle or radius. Cranes equipped with jibs or boom tip extensions are to be tested using both the main boom and the jib, with an appropriate test load in each case.

5.4.3. PERFORMANCE TEST-DERRICKS, GANTRY CRANES, TOWER CRANES, CABLEWAYS, AND HOISTS, INCLUDING OVERHEAD CRANES. This equipment is to be performance tested with a test load weighing 110 percent of the rated load. In testing cableways, the test load is to be traveled to the upstream and downstream limits of travel and thoroughly performance tested in at least three travel positions, including both limits of travel.

5.4.4. BOOM ANGLE INDICATOR. Power cranes (includes draglines) with booms capable of moving in the vertical plane shall be provided with a boom angle indicator in good working order.

5.4.5. CRANE TEST CERTIFICATION. The performance test required by 5.4.2 and 5.4.3 is fulfilled if the contractor provides the contracting officer a copy of the certificate of inspection made within the past 12 months by a qualified person or by a government or private agency satisfactory to the contracting officer.

5.4.6. POSTING FOR HIGH VOLTAGE LINES. A notice of the ten foot (or greater) clearance required by OSHA 1926.550, Subpart N, shall be posted in the operator's cab of cranes, shovels, boom-type concrete pumps, backhoes, and related equipment.

5.4.7. BOOM STOPS. Cranes or derricks with cable-supported booms, except draglines, shall have a device attached between the gantry of the A-frame and the boom chords to limit the elevation of the boom. The device shall control the vertical motions of the boom with increasing resistance from 83 or less, until completely stopping the boom at not over 87 above horizontal.

5.4.8. SAFETY HOOKS. Hooks used in hoisting personnel or hoisting loads over construction personnel or in the immediate vicinity of construction personnel shall be forged steel equipped with safety keepers. When shackles are used under these conditions, they shall be of the locking type or have the pin secured to prohibit turning.

5.5 ROLLOVER PROTECTIVE STRUCTURES (ROPS)

5.5.1 ROLLOVER PROTECTIVE STRUCTURES. OSHA 1926, Subpart W, Overhead Protection, Sections 1000 and 1002 are applicable regardless of the year in which the equipment was manufactured and regardless of the struck capacity of the equipment.

5.5.2 EQUIPMENT REQUIRING ROPS. The requirement for ROPS meeting 5.5.1 above applies to crawler and rubber-tired tractors such as dozers, push-and-pull tractors, winch tractors, tractors with backhoes, and mowers; off-highway, self-propelled, pneumatic-tired earth movers, including scrapers, motor graders and loaders; and rollers, compactors, and water tankers (excluding trucks with cabs). These requirements shall also apply to agricultural and industrial tractors and similar equipment.

5.5.3 EQUIPMENT REQUIRING SEATBELTS. The requirements for seatbelts as specified in OSHA Subpart O, Motor Vehicles, Mechanized Equipment, and Marine Operations, Section 1926,602 shall also apply to self-propelled compactors and rollers, and rubber-tired skid-steer equipment.

5.6 LADDERS AND SCAFFOLDING.

5.6.1 LADDERS. OSHA 1926, Subpart L-Section 450. Ladders shall be used as work platforms only when use of small hand tools or handling of light material is involved. No work requiring lifting of heavy materials or substantial exertion shall be done from ladders.

5.6.2 SCAFFOLDING. OSHA 1926, Subpart L--Section 451. Scaffolds, platforms or temporary floors shall be provided for all work except that which can be done safely from the ground or similar footing.

5.6.3 SAFETY BELTS, LIFELINE, AND LANYARDS. OSHA 1926, Subpart E, Section 104. Lifelines, safety belts and lanyards independently attached or attended, shall be used when

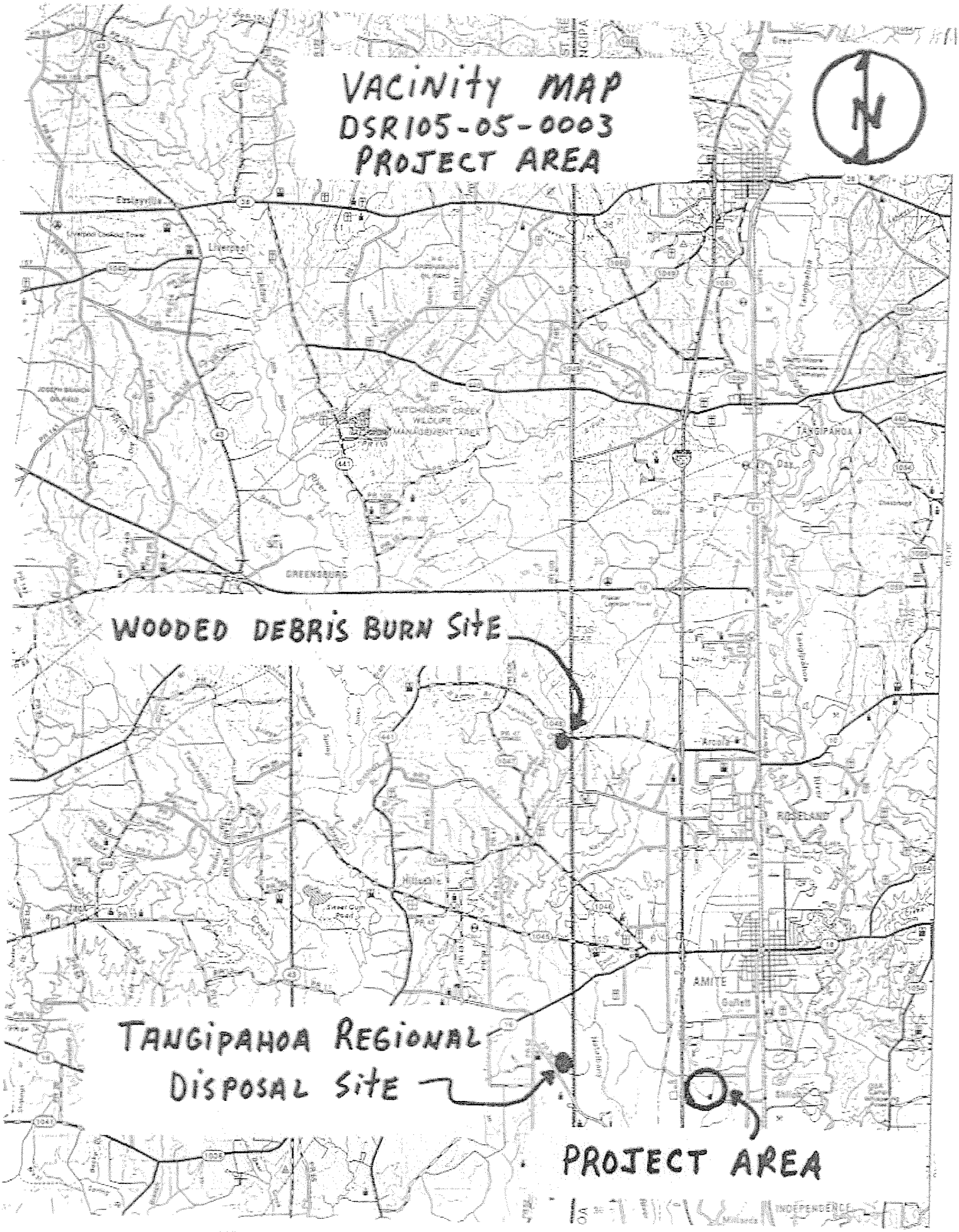
VACINITY MAP
DSR105-05-0003
PROJECT AREA
N
WOODED DEBRIS BURN SITE
TANGIPAHOA REGIONAL
DISPOSAL SITE
PROJECT AREA
Liverpool
GREENSBURG
TANGIPAHOA
AMITE
INDEPENDENCE

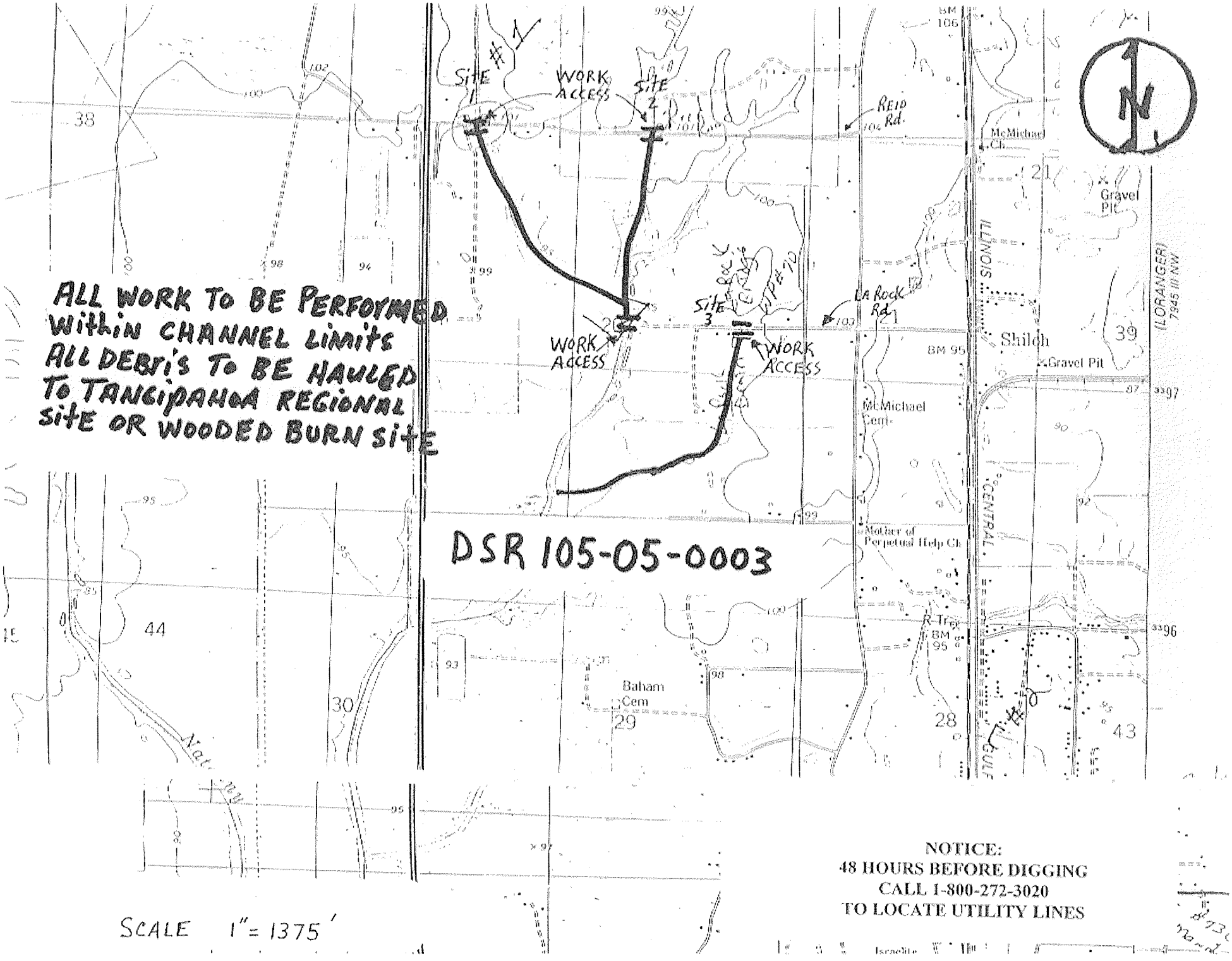

ALL WORK TO BE PERFORMED WITHIN CHANNEL LIMITS
ALL DEBRIS TO BE HAULED TO TANGIPAHOA REGIONAL SITE OR WOODED BURN SITE

DSR 105-05-0003

SCALE 1" = 1375'

NOTICE:
48 HOURS BEFORE DIGGING
CALL 1-800-272-3020
TO LOCATE UTILITY LINES

CHANNEL OBSTRUCTION REMOVAL

LAROCK + REED LATERIALS TO MAIN CANAL

DSR. NO. 105-05-0003 TANGIPAHOA Parish

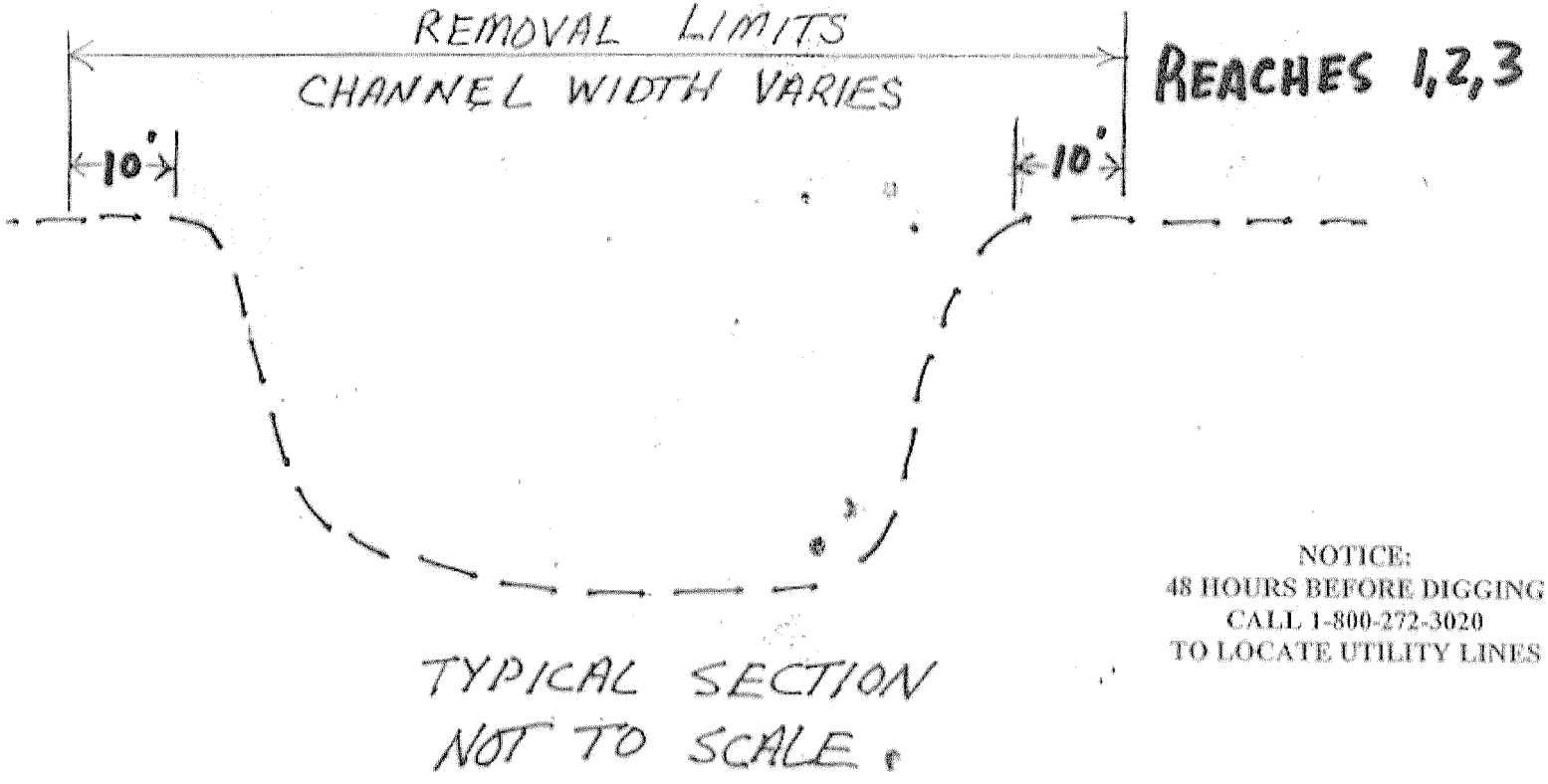

TYPICAL SECTION
NOT TO SCALE.

NOTICE:
48 HOURS BEFORE DIGGING
CALL 1-800-272-3020
TO LOCATE UTILITY LINES

Construction Specification 8—Mobilization and Demobilization

1. Scope

The work consists of the mobilization and demobilization of the contractor's forces and equipment necessary for performing the work required under the contract. It does not include mobilization and demobilization for specific items of work for which payment is provided elsewhere in the contract. Mobilization will not be considered as work in fulfilling the contract requirements for commencement of work.

2. Equipment and material

Mobilization shall include all activities and associated costs for transportation of contractor's personnel, equipment, and operating supplies to the site; establishment of offices, buildings, and other necessary general facilities for the contractor's operations at the site; premiums paid for performance and payment bonds including coinsurance and reinsurance agreements as applicable; and other items specified in section 4 of this specification.

Demobilization shall include all activities and costs for transportation of personnel, equipment, and supplies not required or included in the contract from the site; including the disassembly, removal, and site cleanup of offices, buildings, and other facilities assembled on the site specifically for this contract.

This work includes mobilization and demobilization required by the contract at the time of award. If additional mobilization and demobilization activities and costs are required during the performance of the contract as a result of changed, deleted, or added items of work for which the contractor is entitled to an adjustment in contract price, compensation for such costs will be included in the price adjustment for the item or items of work changed or added.

3. Payment

Payment will be made as the work proceeds, after presentation of paid invoices or documentation of direct costs by the contractor showing specific mobilization and demobilization costs and supporting evidence of the charges of suppliers, subcontractors, and others. When the total of such payments is less than the lump sum contract price, the balance remaining will be included in the final contract payment. Payment of the lump sum contract price for mobilization and demobilization will constitute full compensation for completion of the work.

Payment will not be made under this item for the purchase costs of materials having a residual value, the purchase costs of materials to be incorporated in the project, or the purchase costs of operating supplies.

4. Items of work and construction details

4. ITEMS OF WORK AND CONSTRUCTION DETAILS

Items of work to be performed in conformance with this specification and the construction details therefore are:

a. [redacted], Mobilization and Demobilization

(1) This item shall consist of mobilizing and demobilizing personnel and equipment in preparation to perform the work within the scope of this contract.

(2) Access to the sites may be impeded due to shallow water conditions in the channels and/or existing utilities. The contract shall not be modified to increase the performance time or monetary value as a result of difficulty in accessing these sites due to shallow water conditions or existing utilities. Excavation to increase flotation (draft depth) will be allowed to the limits as shown on the drawings.

Pipelines are located below some of the access channel bottoms. All tugboats and barges will be loaded in a manner to ensure that they float at all times. Excavation or wheel washing will not be allowed within any pipeline Right-of-Way as stated in the Special Provisions and as shown on the plans.

(4) This item shall include both:

(a) Mobilizing and demobilizing equipment and operating supplies to the general work area in this contract.

(b) Mobilizing and demobilizing equipment and operating supplies between each of the specific construction sites specified by this contract.

This item shall not include the movement of personnel and supplies within the work sites associated with the daily operation of the contractor's work force.

Payment shall be as specified in Section 3. Such payment will be considered full compensation for this item.

Construction Specification 9—Traffic Control

1. Scope

The work shall consist of establishing traffic control and maintaining safe, convenient use of public roads and rights-of-way.

2. Traffic and access

The contractor's operations shall cause no unnecessary inconvenience to the public. The public rights-of-way shall be maintained at all times unless interruption is authorized by proper local authority. Contractor's authorized closing or detour plans shall be provided to the engineer for approval.

Safe and adequate access shall be provided and maintained to all public protection devices and to all critical utility control locations. Facility access shall be continuous and unobstructed unless otherwise approved.

3. Storage of equipment and material in public streets

Construction materials and equipment shall not be stored or parked on public streets, roads, or highways. During any material or equipment loading or unloading activities that may temporarily interfere with traffic, an acceptable detour shall be provided for the duration of the activity. Any associated expense for this activity is the responsibility of the contractor.

Excavated material, including suitable material that is intended for adjacent trench backfill or other earth backfill as specified in section 5 of this specification, shall not be stored on public streets, roads, or highways that remain in service for the public. Any waiver of this requirement must be obtained from the proper local authority and approved by the engineer. All excess and unsuitable material shall be removed from the site as soon as possible. Any spillage shall be removed from roadways before they are used by the public.

4. Street closures, detours, and barricades

The contractor shall comply with the requirements of all applicable responsible units of government for closure of any street, road, or highway. The contractor shall provide the required barriers, guards, lights, signs, temporary bridges, and flaggers together with informing the public of any detours and construction hazards by the most suitable means available, such as local newspapers or radio stations. The contractor is also responsible for compliance with additional public safety requirements that may arise during construction. The contractor shall furnish, install, and, upon completion of the work, promptly remove all signs, warning devices, and other materials used in the performance of this work.

Unless otherwise specified, the contractor shall notify, in writing, the fire chief, police chief, county sheriff, state patrol, schools that operate school buses, or any other government official as may be appropriate no less than 7 days before closing, partly closing, or reopening any street, road, or highway.

Unless otherwise specified, the contractor shall furnish to the engineer a written plan showing the proposed method of signing, barricading for traffic control, and safety for street detours and closures.

All temporary detours will be maintained to ensure use of public rights-of-way is provided in a safe manner. This may include dust control, grading, and graveling as required in section 7 of this specification.

5. General and specific references

All signs, signals, barricades, use of flaggers, and other traffic control and public safety devices shall conform to the general requirements set forth in the Manual of Uniform Traffic Control Devices (MUTCD) and the latest edition of *Standard Highway Signs and Standard Alphabets for Highway Signs* and/or OSHA *Construction Industry Standards (29 CFR Part 1926), Subpart G, Signs, Signals, and Barricades* unless otherwise specified in section 7 of this specification.

6. Measurement and payment

For items of work for which specific lump sum prices are established in the contract, payment for the work is made at the contract lump sum price. Progress payments will be made based upon the percentage of estimated total time that traffic control will be required unless otherwise specified in section 7 of this specification. Payment will constitute full compensation for all flaggers, labor, materials, equipment, and all other items necessary and incidental to completion of the work.

Compensation for any item of work described in the contract, but not listed in the bid schedule will be included in the payment for the item of work to which it is made subsidiary. Such items and items to which they are made subsidiary are identified in section 7 of this specification.

7. Items of work and construction details

(j) Flagman and/or sheriff's control shall be provided as specified by the COTR.

(k) Yellow, high visibility pennant barrier flagging (nylon rope with plastic pennants) shall be strung between Type II barricades and barrels/drums, only as directed by the COTR.

(l) This traffic control device plan indicates general traffic control devices to be used on this project. It is anticipated that conditions will vary depending on the phase under construction and that the arrangement of those devices will be reviewed on a daily basis. Should the contractor have any question as to the arrangement of those devices, the COTR shall be notified to make an inspection of the site.

(m) Contractor shall provide for the movement of pedestrians for the entire length of the contract. As much as possible, the contractor shall not obstruct existing sidewalks, thereby obstructing pedestrian movements. If existing sidewalks must be obstructed, the contractor shall provide for the movement of pedestrians by posting appropriate signing, such as, "Sidewalk Closed-Use Other Side of Street". Signing shall be reflectorized and lighted at night.

(n) Also, where trenches are excavated outside the roadway surface, the contractor shall provide each dwelling at least one accessible crossing of the backfilled trench area, for use by pedestrians.

(o) As much as possible, the contractor shall provide access to area businesses.

(3) Measurement and payment shall be as specified in Section 6 of this specification.

Construction Specification 203—Channel Obstruction Removal

1. Scope

The work shall consist of the cleanup of designated channel areas consisting of the removal and disposal of trees, logs, stumps, brush, tops, rubbish, debris and other items as specified in Section 8 deposited in the channel.

2. Access

Access shall be designated by NRCS unless alternate routes are obtained by the Contractor and approved by NRCS. All access routes shall be restored, by the Contractor, to the condition prior to the commencement of work under this contract.

3. Limits of Work

Each end of each reach of the channel and its tributaries designated for obstruction removal will be referenced to identified roads or other structures or landmarks or be marked by the Government Representative by means of stakes, flags, or other suitable markers.

4. Removal

Flow obstructions shall be removed by methods including, but not limited to, sawing, cabling, winching, lifting, or dragging. No excavation for floatation or any other reasons will be allowed.

The following guidelines will be used to determine which trees, stumps, and brush to remove. **The final determination will be made by the Government Representative.**

a. All downed trees, brush, limbs, tops, vines, and other washed-in woody vegetative materials lying completely or partially within the stream banks shall be removed.

b. Undermined or storm damaged trees within or outside the banks which are still standing but likely to fall into the stream shall be removed.

c. Stumps of downed trees within the channel banks shall not be removed unless otherwise noted in Section 8 of this specification.

All building materials, manufactured items, and other loose foreign debris lying completely or partially within the limits of designated areas.

5. Disposal

All material produced from "Channel Obstruction Removal", shall be hauled to the nearest public landfill or disposed of as specified in Section 8 of this specification.

Sediment removed from the watercourses shall be placed and spread as specified in Section 8. No sediment shall be placed on improved property except where directed or allowed by NRCS to fill stump holes, ruts, and other local depressions. Alternate methods of disposal proposed by the Contractor must be approved by NRCS.

Debris shall not be placed in tributaries, side ditches, floodplains nor other defined water entrances to the watercourse being cleaned.

6. Special Requirements

Roadways constructed in the work areas shall be kept to the minimum necessary. No grading for equipment to work or benching of the channel sides will be permitted without the concurrence of NRCS.

All saw cuts shall be made parallel to and as close to ground level as the cutting tools will permit.

The Contractor shall take reasonable precautions to prevent further damage to the channel and its environment to include channel banks, fishery resources, and undamaged trees. The Contractor shall provide tanks or barrels to be used for off-site disposal of chemical pollutants such as drained lubricating or transmission oils, greases, etc. produced as a by product of this work. Washing, fueling, or servicing of equipment shall be avoided where spillage or wash water can enter the watercourse.

The Contractor shall not operate heavy equipment such as crawler tractors and tracked backhoes within flowing channels. Any operation of heavy equipment within the banks of the watercourse must be approved by NRCS.

The number of channel crossings shall be kept to a minimum. Materials used to form channel crossings shall be removed once the work for the subject reach is completed.

The Contractor shall backfill holes in the channels and channel banks resulting from stump removal **in residential and other landscaped areas**. Backfill shall be the best fill material available from within the channel area and within fifty (50) feet of the stump hole. Upon occasion, spoil may not be available. In such cases, fill material shall be hauled into the site to fill the stump holes.

Fences which must be cut or removed for access shall be repaired or replaced by the Contractor at his expense to equal or exceed the quality of fencing that was in place prior to cutting or removal.

The Contractor shall take all reasonable precautions to prevent further damage to structures, utilities, or other fixed improvements and shall promptly repair or replace at his expense any such improvements damaged by his operations.

The Contractor shall coordinate with the appropriate road department, the methods and manners of traffic control.

7. Measurement and payment

Payment will be made on a lump sum basis. Such payment shall be considered full compensation for all materials, labor, equipment, tools, seeding and other items necessary and incidental to complete the work.

8. Items of work and construction details

Items of work to be performed in conformance with this specification and the construction details therefore are:

a. Channel Obstruction Removal

(1) This item shall consist of the removal and disposal of all obstructions caused by Hurricane Katrina from within the specified limits shown on the drawing or as staked in the field.

(2) The lateral work limits shall be as shown on the drawings. The beginning and ending work limits are as shown on the "Site Location Maps". When debris removal is required at bridge locations, the work limits shall be the distance necessary to remove all floating and submerged accumulated debris. At bridges, both sides of the channel may be used as work sides if conditions warrant.

(3) All woody debris within the work limits shall be removed. Vegetative debris longer than 18 inches or having a diameter greater than 2 inches within the work limits shall be removed. This is to include, but is not limited to all debris (trees, root balls which have been displaced, etc.) that is a part of the debris within the work limits. Leaning trees, (those which are leaning over the channel and are identified for removal), shall be cut off at the ground line leaving the root mass in place.

(4) The contractor is responsible for any debris, which his operation may dislodge and float downstream of the work area.

(5) All debris removed from within the work limits shall be disposed of by loading and hauling to the public landfill site shown on the drawings. The contractor is responsible for payment of any tipping fees. Tangipahoa Parish $25.00 per ton.

(6) Any hazardous material encountered, such as batteries, used motor oil, scrap tires, white goods, any item which could contain CFC's, etc., shall be loaded and hauled to an approved hazard waste disposal site.

REGISTER OF WAGE DETERMINATIONS UNDER THE SERVICE CONTRACT ACT
By direction of the Secretary of Labor

U.S. DEPARTMENT OF LABOR
EMPLOYMENT STANDARDS ADMINISTRATION
WAGE AND HOUR DIVISION
WASHINGTON, D.C. 20210

William W. Gross
Director

Division of Wage Determinations

Wage Determination No: 1980-0614
Revision No: 24
Date Of Revision: 06/23/2005

State: Louisiana
Area: Louisiana Statewide

Fringe Benefits Required Follow the Occupational Listing

Employed on service contracts for forestry, land management, the cleaning of public use areas and timber inventory services.

OCCUPATION CODE - TITLE	MINIMUM WAGE RATE
08010 - Brush/Precommercial Thinner	10.65
08040 - Choker Setter	9.80
08070 - Faller/Bucker	12.27
08100 - Fire Lookout	10.65
08130 - Forestry Equipment Operator	13.48
08160 - Forestry/Logging Heavy Equipment Operator	15.58
08190 - Forestry Technician	15.58
08190 - Forestry Truckdriver	15.58
08250 - General Forestry Laborer	9.37
08280 - Nursery Specialist	14.77
08310 - Slash Piler/Burner	10.65
08340 - Tree Climber	11.92
08370 - Tree Planter	8.70
08400 - Tree Planter, Mechanical	8.70

ALL OCCUPATIONS LISTED ABOVE RECEIVE THE FOLLOWING BENEFITS:

HEALTH & WELFARE: $2.87 an hour or $114.80 a week or $497.47 a month

VACATION: 2 weeks paid vacation after 1 year of service with a contractor or successor; and 3 weeks after 10 years. Length of service includes the whole span of continuous service with the present contractor or successor, wherever employed, and with the predecessor contractors in the performance of similar work at the same Federal facility. (Reg. 29 CFR 4.173)

HOLIDAYS: A minimum of ten paid holidays per year: New Year's Day, Martin Luther King Jr.'s Birthday, Washington's Birthday, Memorial Day, Independence Day, Labor Day, Columbus Day, Veterans' Day, Thanksgiving Day, and Christmas Day. (A contractor may substitute for any of the named holidays another day off with pay

the fringe benefits as are determined. Such conforming process shall be initiated by the contractor prior to the performance of contract work by such unlisted class(es) of employees. The conformed classification, wage rate, and/or fringe benefits shall be retroactive to the commencement date of the contract. {See Section 4.6 (C)(vi)} When multiple wage determinations are included in a contract, a separate SF 1444 should be prepared for each wage determination to which a class(es) is to be conformed.

The process for preparing a conformance request is as follows:

1) When preparing the bid, the contractor identifies the need for a conformed occupation(s) and computes a proposed rate(s).

2) After contract award, the contractor prepares a written report listing in order proposed classification title(s), a Federal grade equivalency (FGE) for each proposed classification(s), job description(s), and rationale for proposed wage rate(s), including information regarding the agreement or disagreement of the authorized representative of the employees involved, or where there is no authorized representative, the employees themselves. This report should be submitted to the contracting officer no later than 30 days after such unlisted class(es) of employees performs any contract work.

3) The contracting officer reviews the proposed action and promptly submits a report of the action, together with the agency's recommendations and pertinent information including the position of the contractor and the employees, to the Wage and Hour Division, Employment Standards Administration, U.S. Department of Labor, for review. (See section 4.6(b)(2) of Regulations 29 CFR Part 4).

4) Within 30 days of receipt, the Wage and Hour Division approves, modifies, or disapproves the action via transmittal to the agency contracting officer, or notifies the contracting officer that additional time will be required to process the request.

5) The contracting officer transmits the Wage and Hour decision to the contractor.

6) The contractor informs the affected employees.

Information required by the Regulations must be submitted on SF 1444 or bond paper.

When preparing a conformance request, the "Service Contract Act Directory of Occupations" (the Directory) should be used to compare job definitions to insure that duties requested are not performed by a classification already listed in the wage determination. Remember, it is not the job title, but the required tasks that determine whether a class is included in an established wage determination. Conformances may not be used to artificially split, combine, or subdivide classifications listed in the wage determination.

□

FOR AGENCY USE ONLY

UNITED STATES DEPARTMENT OF AGRICULTURE
PURCHASE ORDER

1 PAGE NO.	2 RECEIVING OFFICE NO.	3 CONTRACT NUMBER	4 ORDER DATE	5 SF-281	6 UNIT CODE	7 FUND CODE	8 ORDER NUMBER	9 SUB.
1 OF 1		AD-7217-C-05-003K	13 Sept 05					

9a TYPE PURCHASE (Check One): [X] PURCHASE ORDER [ ] DELIVERY ORDER

9b SELLER'S IDENT. NO.

9c FORM 1099: [ ] NO [ ] YES ▶

9d TAXPAYER'S IDENT. NO.

10 TO: (Seller's Name, Address, City, State, Zip Code, and Phone No.)
Fortmayer Bushog Service
141 Hebert BLVD
Belle Chasse, LA 70037

11 SHIP TO ▶

Consignee, Address, Zip Code, and Place of Inspection and Acceptance

PHONE (A/C & No.) Check One ▶ ▶ [ ] FTS ▶ [ ] COMM

12 LINE ITEM	13 ACT CODE	14 DESCRIPTION	15 BUDGET OBJECT	16 ACC LINE	17 QUANTITY	18 UNIT ISSUE	19 UNIT PRICE	20 AMOUNT
1		Remove + incinerate dead animals on the Citrus Land Property NRCS-S-LA-1002			300	Ea	$300.00	90,000

20a THIS PURCHASE ORDER NEGOTIATED PURSUANT TO AUTHORITY OF 41 U.S.C. 252(c)(

21 F.O.B. POINT	22 DISCOUNT AND/OR NET PAYMENT TERMS	22a TYPE COMMODITY/ PAYMENT CODE ▶	Sub-Total ▶	25 90,000.00
23 DELIVER TO F.O.B. POINT ON OR BEFORE (Date)	24 SHIP VIA	26 ESTIMATED FREIGHT	TOTAL ▶	27 90,000.00

28 ACC LINE	29 ACCOUNTING CLASSIFICATION A	B	C	D	E	30 DISTRIBUTION	31 AMOUNT
2	5	10	5 3	4	1 4 1 2	2	

31a ISSUING OFFICE NAME AND ADDRESS
USDA/NRCS
3737 Government St
Alexandria, LA 71302

31b ORDERED BY (Name and Title)
Charles E. Phillips, Jr.

31c COMMERCIAL PHONE (Area Code and Number)
318-473-7796

31d FTS PHONE NO.

31e AUTHORIZED SIGNATURE
Ch. E. Phillips Jr.

This form was electronically produced by Elite Federal Forms, Inc./ITS 3/1/96

FORM AD-538-7 (REV. 7/90)

To: Natural Resources Conservation Service

I/We BILLY MUNGESSER affirm that I/We are the owner(s) of the property for which the assistance indicated below is requested. We the Landowners of said property hereby request that the United States Department of Agriculture/Natural Resources Conservation Service (USDA/NRCS) dispose of all dead animals on my property as a result of Hurricane Katrina on August 29, 2005.

I/We do give USDA/NRCS permission to dispose of the animals on my property.

Signature 9/12/05

Date

OMB Approval No. 9000-0009

REQUEST FOR QUOTATION (THIS IS NOT AN ORDER)	This RFQ [ ] is [X] is not a Small Business Set-Aside	Page 1	of Pages

1. REQUEST NO.	2. DATE ISSUED	3. REQUISITION/PURCHASE REQUEST NO.	4. CERT. FOR NAT. DEF. UNDER BDSA REG. 2 AND/OR DMS REG. 1 →	RATING
		NRCS-5-LA-1002		

5a. ISSUED BY: USDA-NATURAL RESOURCES CONSERVATION SERVICE

6. DELIVER BY (Date)

5b. FOR INFORMATION CALL (NO COLLECT CALLS)

NAME	TELEPHONE NUMBER	
	AREA CODE	NUMBER
Charles E. Phillips Jr.	318	473-7796

7. DELIVERY
[ ] FOB DESTINATION [ ] OTHER (see schedule)

8. TO:

9. DESTINATION

a. NAME

b. COMPANY

a. NAME OF CONSIGNEE

b. STREET ADDRESS

c. STREET ADDRESS

c. CITY

d. CITY

e. STATE

f. ZIP CODE

d. STATE

e. ZIP CODE

10. PLEASE FURNISH QUOTATIONS TO THE ISSUING OFFICE IN BLOCK 5a ON OR BEFORE CLOSE OF BUSINESS (Date)

3:00 PM 13 Sept 2005

IMPORTANT: This is a request for information, and quotations furnished are not offers. If you are unable to quote, please so indicate on this form and return it to the address in Block 5a. This request does not commit the Government to pay any costs incurred in the preparation of the submission of this quotation or to contract for supplies or services. Supplies are of domestic origin unless otherwise indicated by quoter. Any representations and/or certifications attached to this Request for Quotations must be completed by the quoter.

11. SCHEDULE (Include applicable Federal, State and local Taxes)

ITEM NO. (a)	SUPPLIES/SERVICES (b)	QUANTITY (c)	UNIT (d)	UNIT PRICE (e)	AMOUNT (f)
	Furnish all labor, materials and equipment to remove and incinerate dead animals, in accordance with the attached specifications, drawings, terms and conditions. The project site is located in Plaquemines Parish LA Work is to commence within 1 day and be completed within 10 calendar days after notification of contract award. To submit a quote, complete this form, including blocks 13 through 16, Schedule (page 3), and Section K appropriately completed, and forward to the address shown in block 5a. Quotes may also be submitted by FAX to (318) 473-7831. Quotes must be submitted by the time and date specified in block 10.			See Section B, SCHEDULE	

12. DISCOUNT FOR PROMPT PAYMENT	a. 10 CALENDAR DAYS %	b. 20 CALENDAR DAYS %	c. 30 CALENDAR DAYS %	d. CALENDAR DAYS

NOTE: Additional provisions and representations [X] are [ ] are not attached.

NUMBER	PERCENTAGE

13. NAME AND ADDRESS OF QUOTER

a. NAME OF QUOTER
ORTMAYER BUSHOG SERVICE

b. STREET ADDRESS
141 HEBERT BLVD

c. COUNTY
PLAQUEMINES

d. CITY
BELLECHASSE

e. STATE
LA

f. ZIP CODE
70037

14. SIGNATURE OF PERSON AUTHORIZED TO SIGN QUOTATION
R Fortmayer

15. DATE OF QUOTATION
9-13-05

16. SIGNER

a. NAME (type or print)
RANDALL FORTMAYER

b. TELEPHONE
504 382-2892

AREA CODE
504

NUMBER

c. TITLE (type or print)
OWNER

Authorized for Local Reproduction
Previous Edition Not Usable

STANDARD FORM 18 (Rev. 6-95)
Prescribed by GSA FAR (48 CFR) 53.215-1(a)

NRCS-___-LA-_____ SECTION B

PART I - THE SCHEDULE

SECTON B - SUPPLIES OR SEVICES AND PRICE/COSTS

EMERGENCY WATERSHED PROTECTION

Plaquemine Parish

Citrus Land Livestock

ITEM#	WORK	SPEC	QTY	UNIT	UNIT PRICE	AMOUNT
1	Livestock removal	999	300	EA	300	$ 90,000.00

TOTAL BID $ 90,000

NINTY THOUSAND

B.2 Award Restrictions (AUG 1987, SCS, AMB) One Award for the aggregate of all items will be made under this solicitation

NOTE 1: *Bidder must complete all bid items.*

NOTE 2: This bid schedule must be turned in with the offer.

NOTE 3: Bids must be (A) submitted on the forms furnished by the Government or on copies of those forms, and (B) manually signed. The person signing a bid must initial each erasure or change appearing on any bid form.

NOTE 4: Any deviation from the above three notes may result in a bid being disqualified.

SOLICITATION/CONTRACT/ORDER FOR COMMERCIAL ITEMS
OFFEROR TO COMPLETE BLOCKS 12, 17, 23, 24, & 30

1. REQUISITION NUMBER

PAGE 1 OF 19

2. CONTRACT NO. AD-7217-C-05-006K

3. AWARD/EFFECTIVE DATE 16 Sept 05

4. ORDER NUMBER

5. SOLICITATION NUMBER RFQ-06-LA-05

6. SOLICITATION ISSUE DATE 09/14/2005

7. FOR SOLICITATION INFORMATION CALL:

a. NAME Ralph Broome

b. TELEPHONE NUMBER (No collect calls) (318) 473-7781

8. OFFER DUE DATE/LOCAL TIME 09/15/05 4:00 pm

9. ISSUED BY CODE

USDA-NRCS
3737 Government St.
Alexandria, LA 71302

10. THIS ACQUISITION IS
[X] UNRESTRICTED
[ ] SET ASIDE: % FOR
[ ] SMALL BUSINESS
[ ] HUBZONE SMALL BUSINESS
[ ] 8(A)
NAICS: 237990
SIZE STANDARD: $28.5 million

11. DELIVERY FOR FOB DESTINATION UNLESS BLOCK IS MARKED
[ ] SEE SCHEDULE

12. DISCOUNT TERMS

13. THIS CONTRACT IS A RATED ORDER UNDER DPAS (15 CFR 700)

13b. RATING

14. METHOD OF SOLICITATION
[X] RFQ [ ] IFB [ ] RFP

15. DELIVER TO CODE

See Block 9

16. ADMINISTERED BY CODE

See Block 9

17a. CONTRACTOR/OFFEROR CODE FACILITY CODE

SANTEE MODULAR HOMES INC.
211 MERRI OAKS CT
SANTEE, SC 29142 DUNS: 827350364

TELEPHONE NO. 803-897-2144

17b. CHECK IF REMITTANCE IS DIFFERENT AND PUT SUCH ADDRESS IN OFFER

18a. PAYMENT WILL BE MADE BY CODE

See Block 9

18b. SUBMIT INVOICES TO ADDRESS SHOWN IN BLOCK 18a UNLESS BLOCK BELOW IS CHECKED [ ] SEE ADDENDUM

19. ITEM NO.	20. SCHEDULE OF SUPPLIES/SERVICES	21. QUANTITY	22. UNIT	23. UNIT PRICE	24. AMOUNT
	Ravine du Conguillas (DSR 103-05-003) Contractor shall provide all labor, materials, equipment, transportation & other incidentals required to remove storm-related debris indicated herein. Complete pricing on Schedule of Prices included as page 3. FAX OFFER TO (318) 473-7831 prior to date/time shown in Block 8. (Use Reverse and/or Attach Additional Sheets as Necessary)				

25. ACCOUNTING AND APPROPRIATION DATA

26. TOTAL AWARD AMOUNT (For Govt. Use Only)

[ ] 27a. SOLICITATION INCORPORATES BY REFERENCE FAR 52.212-1, 52.212-4. FAR 52.212-5 IS ATTACHED. ADDENDA [ ] ARE [X] ARE NOT ATTACHED

[ ] 27b. CONTRACT/PURCHASE ORDER INCORPORATES BY REFERENCE FAR 52.212-4. FAR 52.212-5 IS ATTACHED. ADDENDA [ ] ARE [X] ARE NOT ATTACHED

[X] 28. CONTRACTOR IS REQUIRED TO SIGN THIS DOCUMENT AND RETURN 1 COPIES TO ISSUING OFFICE. CONTRACTOR AGREES TO FURNISH AND DELIVER ALL ITEMS SET FORTH OR OTHERWISE IDENTIFIED ABOVE AND ON ANY ADDITIONAL SHEETS SUBJECT TO THE TERMS AND CONDITIONS SPECIFIED HEREIN.

[ ] 29. AWARD OF CONTRACT: REF _____ OFFER DATED _____. YOUR OFFER ON SOLICITATION (BLOCK 5), INCLUDING ANY ADDITIONS OR CHANGES WHICH ARE SET FORTH HEREIN, IS ACCEPTED AS TO ITEMS:

30a. SIGNATURE OF OFFEROR/CONTRACTOR

[signature]

31a. UNITED STATES OF AMERICA (SIGNATURE OF CONTRACTING OFFICER)

[signature]

30b. NAME AND TITLE OF SIGNER (Type or print)

L. WAYNE SHULER PRES

30c. DATE SIGNED 9-15-05

31b. NAME OF CONTRACTING OFFICER (Type or print)

Charles E Phillips JR

31c. DATE SIGNED 16 Sept 05

PREVIOUS EDITION IS NOT USABLE

Prescribed by GSA - FAR (48 CFR) 53.212

RFQ-06-LA-05 Page 3 of 19

PART I - THE SCHEDULE

SECTION B - SUPPLIES OR SERVICES AND PRICES/COSTS

MINIMUM OF PRICES

Item No.	Supplies/Services	Qty.	Unit	Unit Price	Amount
1.	Mobilization	1	Job	Lump Sum	$ 500.00
2.	Debris Removal	1	Job	Lump Sum	$ 28,000.00
3.	Seeding	1	Acre	$ 500.00	$ 500.00

TOTAL PRICE: $ 29,000.00

AWARD RESTRICTION (AUG 1987 NRCS, AMB)
One award for the aggregate of all items will be made under this solicitation.

SECTION C - DESCRIPTION/SPECIFICATIONS/WORK STATEMENT

C.1 AGAR 452.211-72 STATEMENT OF WORK/SPECIFICATIONS (FEB 1988)

The Contractor shall furnish the necessary personnel, material, equipment, services and facilities (except as otherwise specified), to perform the Statement of Work/Specifications referenced in Section J.

C.2 AGAR 452.211-73 ATTACHMENTS TO STATEMENT OF WORK/SPECIFICATIONS (FEB 1988)

The attachments to the Statement of Work/Specifications listed in Section J are hereby made part of this solicitation and any resultant contract.

SECTION D - PACKAGING AND MARKING

THERE ARE NO CLAUSES INCLUDED IN THIS SECTION

SECTION E - INSPECTION AND ACCEPTANCE

E.1 52.252-2 CLAUSES INCORPORATED BY REFERENCE (JUN 1988)

This contract incorporates one or more clauses by reference, with the same force and effect as if they were given in full text. Upon request, the Contracting Officer will make their full text available. Also, the full text of a clause may be accessed electronically at this/these address(es): http://www.arnet.gov/far/

I. FEDERAL ACQUISITION REGULATION (48 CFR CHAPTER 1) CLAUSES

NUMBER	TITLE	DATE
52.246-4	INSPECTION OF SERVICES-FIXED-PRICE	AUG 1996

SECTION F - DELIVERIES OR PERFORMANCE

F.1 52.252-2 CLAUSES INCORPORATED BY REFERENCE (JUN 1988)

This contract incorporates one or more clauses by reference, with the same force and effect as if they were given in full text. Upon request, the Contracting Officer will make their full text available. Also, the full text of a clause may be accessed electronically at this/these address(es): http://www.arnet.gov/far/

I. FEDERAL ACQUISITION REGULATION (48 CFR CHAPTER 1) CLAUSES

NUMBER	TITLE	DATE
52.211-18	VARIATION IN ESTIMATED QUANTITY	APR 1984

F.2 AGAR 452.211-74 PERIOD OF PERFORMANCE (FEB 1988)

The period of performance of this contract is ten (10) days from the day following the Contractor's receipt of notice of contract award.

SECTION G - CONTRACT ADMINISTRATION DATA

G.1 NRCSAR 4I-52.232-70 DESIGNATED PAYMENT OFFICE CONTACT POINT (NRCS, AMB, AUG 1989)

The contact point described below coordinates the issuance of payments under this contract. If payment is not received within 5 days after the due date specified in the contract, contact the payment office designated below for information on when payment will be made.

Ralph Broome
USDA-Natural Resources Conservation Service
3737 Government Street
Alexandria, LA 71302

Telephone: (318) 473-7781

If questions arise on the amount paid, contact the Contracting Officer at the number or address shown in the contract.

SECTION H - SPECIAL CONTRACT REQUIREMENTS

~~THERE ARE NO CLAUSES INCLUDED IN THIS SECTION~~

PART II - CONTRACT CLAUSES

SECTION I - CONTRACT CLAUSES

I.1 52.252-2 CLAUSES INCORPORATED BY REFERENCE (JUN 1988)

This contract incorporates one or more clauses by reference, with the same force and effect as if they were given in full text. Upon request, the Contracting Officer will make their full text available. Also, the full text of a clause may be accessed electronically at this/these address(es): http://www.arnet.gov/far/

I. FEDERAL ACQUISITION REGULATION (48 CFR CHAPTER 1) CLAUSES

	NUMBER	TITLE	DATE
	52.202-1	DEFINITIONS	JUL 2004
	52.204-7	CENTRAL CONTRACTOR REGISTRATION	OCT 2003
**	52.209-6	PROTECTING THE GOVERNMENT'S INTEREST WHEN SUBCONTRACTING WITH CONTRACTORS DEBARRED, SUSPENDED, OR PROPOSED FOR DEBARMENT	JUL 1995
	52.219-6	NOTICE OF TOTAL SMALL BUSINESS SET-ASIDE	JUN 2003
****	52.222-1	NOTICE TO THE GOVERNMENT OF LABOR DISPUTES	FEB 1997
	52.222-3	CONVICT LABOR	JUN 2003
*	52.222-21	PROHIBITION OF SEGREGATED FACILITIES	FEB 1999
*	52.222-26	EQUAL OPPORTUNITY	APR 2002
**	52.222-35	EQUAL OPPORTUNITY FOR SPECIAL DISABLED VETERANS, VETERANS OF THE VIETNAM ERA, AND OTHER ELIGIBLE VETERANS	DEC 2001
*	52.222-36	AFFIRMATIVE ACTION FOR WORKERS WITH DISABILITIES	JUN 1998
**	52.222-37	EMPLOYMENT REPORTS ON SPECIAL DISABLED VETERANS, VETERANS OF THE VIETNAM ERA, AND OTHER ELIGIBLE VETERANS	DEC 2001
	52.222-41	SERVICE CONTRACT ACT OF 1965, AS AMENDED	MAY 1989
*****	52.223-5	POLLUTION PREVENTION AND RIGHT-TO-KNOW INFORMATION	AUG 2003
***	52.223-6	DRUG FREE WORKPLACE	MAY 2001
	52.225-13	RESTRICTIONS ON CERTAIN FOREIGN PURCHASES	DEC 2003
	52.232-1	PAYMENTS	APR 1984
	52.232-8	DISCOUNTS FOR PROMPT PAYMENT	FEB 2002
	52.232-11	EXTRAS	APR 1984
	52.232-23	ASSIGNMENT OF CLAIMS	JAN 1986
	52.232-25	PROMPT PAYMENT	OCT 2003
	52.232-33	PAYMENT BY ELECTRONIC FUNDS TRANSFER--CENTRAL CONTRACTOR REGISTRATION	OCT 2003

52.233-1	DISPUTES	JUL 2002
	ALTERNATE I	DEC 1991
52.233-3	PROTEST AFTER AWARD	AUG 1996
52.236-7	PERMITS AND RESPONSIBILITIES	NOV 1991
52.243-1	CHANGES - FIXED-PRICE	AUG 1987
	Alternate I (APR 1984)	
52.249-1	TERMINATION FOR CONVENIENCE OF THE GOVERNMENT (FIXED PRICE)(SHORT FORM)	APR 1984
52.249-8	DEFAULT (FIXED PRICE SUPPLY AND SERVICE	APR 1984
52.253-1	COMPUTER GENERATED FORMS	JAN 1991

(* Applicable if contract award exceeds $10,000)
(** Applicable if contract award exceeds $25,000)
(*** Applicable if contract is awarded to an individual)
(**** Applicable to Emergency Watershed Protection Projects)
(***** Applicable when performance is on a Federal Facility)

I.2 52.222-42 STATEMENT OF EQUIVALENT RATES FOR FEDERAL HIRES (MAY 1989)

In compliance with the Service Contract Act of 1965, as amended, and the regulations of the Secretary of Labor (29 CFR Part 4), this clause identifies the classes of service employees expected to be employed under the contract and states the wages and fringe benefits payable to each if they were employed by the contracting agency subject to the provisions of 5 U.S.C. 5341 or 5332. THIS STATEMENT IS FOR INFORMATION ONLY: IT IS NOT A WAGE DETERMINATION

Employee Class Monetary Wage - Fringe Benefits

I.3 52.244-6 SUBCONTRACTS FOR COMMERCIAL ITEMS (JUL 2004)

(a) Definitions. As used in this clausee-
"Commercial item" has the meaning contained in Federal Acquisition Regulation 2.101, Definitions.
"Subcontract", includes a transfer of commercial items between divisions, subsidiaries, or affiliates of the Contractor or subcontractor at any tier.

(b) To the maximum extent practicable, the Contractor shall incorporate, and require its subcontractors at all tiers to incorporate, commercial items or nondevelopmental items as components of items to be supplied under this contract.

(c)(1) The Contractor shall insert the following clauses in subcontracts for commercial items:
(i) 52.219-8, Utilization of Small Business Concerns (MAY 2004)(15 U.S.C. 637(d)(2) and (3)), in all subcontracts that offer further subcontracting opportunities. If the subcontract (except subcontracts to small business concerns) exceed $500,000 ($1,000,000 for construction of any public facility), the subcontractor must include 52.219-8 in lower tier subcontracts that offer subcontracting opportunities.
(ii) 52.222-26, Equal Opportunity (APR 2002)(E.O. 11246).

(iii) 52.222-35, Equal Opportunity for Special Disabled Veterans, Veterans of the Vietnam Era, and Other Eligible Veterans (DEC 2001)(38 U.S.C. 4212(a)).

(iv) 52.222-36, Affirmative Action for Workers with Disabilities (JUN 1998)(29 U.S.C. 793).

(v) 52.247-64, Preference for Privately Owned U.S. Flag Commercial Vessels (APR 2003)(46 U.S.C. Appx 1241 and 10 U.S.C. 2631) (flow down required in accordance with paragraph (d) of FAR clause 52.247-64).

(2) While not required, the Contractor may flow down to subcontracts for commercial items a minimal number of additional clauses necessary to satisfy its contractual obligations.

NATURAL RESOURCES CONSERVATION SERVICE
SUPPLEMENT TO OSHA PARTS 1910 AND 1926
CONSTRUCTION INDUSTRY STANDARDS AND
INTERPRETATIONS

The contractor shall comply with OSHA (Occupational Safety and Health Administration) Parts 1910 and 1926, Construction Industry Standards and Interpretations, and with this supplement.

Requests for variances or waivers from this supplement are to be made to the contracting officer in writing supported by evidence that every reasonable effort has been made to comply with the contractual requirements. A written request for a wavier or a variance shall include--

(1) Specific reference to the provision or standard in question;
(2) An explanation as to why the wavier is considered justified; and
(3) The contractor's proposed alternative, including technical drawings, materials, or equipment specifications needed to enable the contracting officer to render a decision. No wavier or variance will be approved if it endangers any person. The contractor shall not proceed under any requested revision of a provision until the contracting officer has given written approval. The contractor is to hold and save harmless the Soil Conservation Service from any claims or causes of action whatsoever resulting from the contractor or subcontractors proceeding under a wavier or

approved variance.

Copies of OSHA Parts 1910 and 1926, Construction Industry Standards and Interpretations, may be obtained from:

Superintendent of Documents
U. S. Government Printing Office
Washington, DC 20402

NATURAL RESOURCES CONSERVATION SERVICE
SUPPLEMENT TO OSHA PARTS 1910 AND 1926
CONSTRUCTION INDUSTRY STANDARDS AND
INTERPRETATIONS

GENERAL CONTRACTOR REQUIREMENTS

1.1 SAFETY PROGRAM. Each contractor is to demonstrate that he or she has facilities for conducting a safety program commensurate with the work under contract. The contractor is to submit in writing a proposed comprehensive safety program to the contracting officer for approval before the start of construction operations. The program is to specifically state what provision the contractor proposes to take for the health and safety of all employees, including subcontractors and rental equipment operators. The program shall be site specific and provide details relevant to the work to be done, the hazards associated with the work, and the actions that will be necessary to minimize the identified hazards.

1.2 PRECONSTRUCTION SAFETY MEETING. Representatives for the contractor are to meet with the contracting officer (CO) or the CO's representative before the start of construction to discuss the safety program and the implementation of all health and safety standards pertinent to the work under this contract.

1.3 JOINT SAFETY POLICY COMMITTEE. The contractor or designated onsite representative is to participate in monthly meetings of a Joint Safety Policy Committee, composed of Soil Conservation Service and contractor supervisory personnel. At these meetings the contractors project manager and the contracting officer will review the effectiveness of the contractor's safety effort, resolve current health and safety problems, and coordinate safety activities for upcoming work.

1.4 SAFETY PERSONNEL. Each contractor is to designate a competent supervisory employee satisfactory to the contracting officer to administer the safety program.

1.5 SAFETY MEETINGS. A minimum of one "one-on-the-job" or "toolbox" safety meeting is to be conducted each week by all field supervisors or foremen and attended by mechanics and all construction personnel at the job site. The contractor is to also conduct regularly scheduled supervisory safety meetings at least monthly for all levels of job supervision.

1.6 SAFETY INSPECTION. The contractor shall perform frequent and regular safety inspections of the job site, materials, and equipment, and shall correct deficiencies.

1.7 FIRST AID TRAINING. Every contractor foreman's work crew must include an employee who has a current first aid certificate from the Mine Safety and Health Administration, American Red Cross, or other state-approved organization.

1.8 REPORTS. Each contractor is to maintain an accurate record of all job-related deaths, diseases, or disabling injuries. The records shall be maintained in a manner approved by the contracting officer. A copy of all reports is to be provided to the contracting officer. All fatal or serious injuries are to be reported immediately to the contracting officer, and every assistance is to be given in the investigation of the incident, including submission of a comprehensive narrative report to the contracting officer. Other occurrences with serious accident potential, such as equipment failures, slides, and cave-ins, must also be reported immediately. The contractor is to assist and cooperate fully with the contracting officer in conducting accident investigations. The contracting officer is to be furnished all information and data pertinent to investigation of an accident.

1.9 CERTIFICATION OF INSURANCE. Contractors are to provide the contracting officer or his or her representative with certificates of insurance before the start of operations indicating full compliance with State Worker's Compensation statues.

FIRST AID AND MEDICAL FACILITIES

2.1 FIRST AID KITS. A first aid kit approved by the American Red Cross is to be provided at accessible, well-identified locations at the ratio of at least one kit for each 25 employees. The first aid kits are to be moisture proof and dust tight, and the contents of the kits are to be replenished as used or as they become ineffective or outdated.

2.2 EMERGENCY FIRST AID. At least one employee certified to administer emergency first aid must be available for each shift and duly designated by the contractor to care for injured employees. The names of the certified employees shall be posted at the job site.

2.3 COMMUNICATION AND TRANSPORTATION. Prior to the start of work, the contractor is to make necessary arrangements for prompt and dependable communications, transportation, and medical care for injured employees.

At least one stretcher and two blankets shall be readily available for transporting injured employees.

2.4 FIRST AID AND MEDICAL REPORTS. The contractor is to maintain a record system for first aid and medical treatment on the job site. Such reports are to be readily available to the contracting officer and are to include:

(a) A daily treatment log listing chronologically all persons treated for occupational injuries and illness;

(b) Cumulative record of injury for each individual;

(c) Monthly statistical records of occupational injuries, classified by type and nature of injury; and

(d) Required records for worker's compensation.

2.5 SIGNS AND DIRECTIONAL MARKINGS. Adequate identification and directional markers are to be provided to readily denote the location of all first aid stations.

2.6 EMERGENCY LISTING. A listing of telephone numbers and addresses of doctor, rescue squad, hospital, police, and fire departments is to be provided at all first aid locations.

PHYSICAL QUALIFICATION OF EMPLOYEES

3.1 GENERAL REQUIREMENTS. Persons employed throughout the contract are to be physically qualified to perform their assigned duties. Employees must not knowingly be permitted or required to work while their ability or alertness is impaired by fatigue, illness, or any other reason that may jeopardize themselves or others.

3.2 HOIST OPERATIONS. Operators of cranes, cableways, and other hoisting equipment shall be examined annually by a physician and provided with a certification stating that they are physically qualified to safely operate hoisting equipment. The contractor is to submit a copy of each certification to the contracting officer.

3.3 HEAVY EQUIPMENT OPERATORS. It is recommended that operators of trucks and heavy construction equipment be given physical examinations to determine if they are physically qualified to perform their assigned work without endangering themselves or others.

3.4 MOTOR VEHICLE OPERATORS. Operators of motor vehicles engaged primarily in the transportation of personnel are to be 18 years of age or older and have a valid state operator's permit or license for the equipment being operated. The operators must have passed a physical examination administered by a licensed physician within the past year showing that they are physically qualified to operate vehicles safely.

PERSONAL PROTECTIVE EQUIPMENT

4.1 HARDHAT AREAS. The entire job site, with the exception of offices, shall be considered a hardhat area. All personal entering the area are, without exception, required to wear hardhats. The contractor shall provide hardhats for visitors entering hardhat areas.

4.1.1 LABELS Hardhats shall bear a manufacturer's label indicating design compliance with the appropriate ANSI (American National Standards Institute) standard.

4.2 POSTING. Signs at least three by four feet worded as follows with red letters (minimum six inches high) and white background shall be erected at access points to designated hardhat areas:

CONSTRUCTION AREA--HARDHATS REQUIRED
BBYOND THIS POINT

These signs are to be furnished and installed by the contractor at entries to shops, construction yards, and job access points.

4.3 SAFETY GOGGLES (DRILLERS)

4.3.1 DRILLERS AND HELPERS. Drillers and helpers operating pneumatic rock drills must wear protective safety goggles.

MACHINERY AND MECHANIZED EQUIPMENT

5.1 SAFE CONDITION. Before any machinery or mechanized equipment is initially used on the job, it must be inspected and tested by qualified personnel and determined to be in safe operating condition and appropriate for the intended use. Operators shall inspect their equipment prior to the beginning of each shift. Any deficiencies or defects shall be corrected prior to using the equipment. Safety equipment, such as seatbelts, installed on machinery is to be used by equipment operators.

5.2 TAGGING AND LOCKING. The controls of power-driven equipment under repair are to be locked. An effective lockout and tagging procedure is to be established, prescribing specific responsibilities and safety procedures to be followed by the person or persons performing repair work.

5.3 HAUL ROADS FOR EQUIPMENT

5.3.1 ROAD MAINTENANCE. The contractor shall maintain all roadways, including haul roads and access roads, in a safe condition so as to eliminate or control dust and ice hazards. Wherever dust is a hazard, adequate dust-laying equipment shall be available at the job site and utilized to control the dust.

5.3.2 SINGLE-LANE HAUL ROADS. Single-lane haul roads with two-way traffic shall have adequate turnouts. Where turnouts are not practical, a traffic control system shall be provided to prevent accidents.

5.3.3 TWO-WAY HAUL ROADS. On two-way roads,

arrangements are to be such that vehicles travel on the right side wherever possible. Signs and traffic control devices are to be employed to indicate clearly any variations from a right-hand traffic pattern. The road shall be wide enough to permit safe passage of opposing traffic, considering the type of hauling equipment used.

5.3.4 *DESIGN AND CONSTRUCTION OF HAUL ROADS.* Haul road design criteria and drawings, if requested by the contracting officer, are to be submitted for approval prior to road construction. Sustained grades shall not exceed 12 percent and all curves shall have open-sight line with as great a radius as practical. All roads shall be posed with curve signs and maximum speed limits that will permit the equipment to be stopped within one-half the minimum sight distance.

5.3.5. OPERATORS. Machinery and mechanized equipment shall be operated only by authorized qualified persons.

5.3.6 RIDING ON EQUIPMENT. Riding on equipment by unauthorized personnel is prohibited. Seating and safety belts shall be provided for the operator and all passengers.

5.3.7. GETTING ON OR OFF EQUIPMENT. Getting on or off equipment while the equipment is in motion is prohibited.

5.3.8. HOURS OF OPERATION. Except in emergencies, an equipment operator shall not operate any mobile or hoisting equipment for more than 12 hours without an eight hour rest interval away from the job.

5.4. POWER CRANES AND HOISTS (TRUCK CRANES, CRAWLER CRANES, TOWER CRANES, GANTRY CRANES, HAMMERHEAD CRANES, DERRICKS, CABLEWAYS, AND HOISTS).

5.4.1 PERFORMANCE TEST. Before initial onsite operation, at 12-month intervals, and after major repairs or modification, power cranes, derricks, cableways, and hoists must satisfactorily complete a performance test to demonstrate the equipment's ability to safely handle and maneuver the rated loads. The tests shall be conducted in the presence of a representative of the contracting officer. Test data shall be recorded and a copy furnished the contracting officer.

5.4.2 PERFORMANCE TEST-POWER CRANES (Crawler mounted, truck mounted, and wheel mounted). The performance test is to be carried out with outriggers set and with a test load weighing 110 percent of the rated capacity when the boom angle is from 30 to 60 above the horizontal. The test is to consist of raising, lowering and braking the load and rotating the test load through 360 at the specified boom angle or radius. Cranes equipped with jibs or boom tip extensions are to be tested using both the main boom and the jib, with an appropriate test load in each case.

5.4.3. PERFORMANCE TEST-DERRICKS, GANTRY CRANES, TOWER CRANES, CABLEWAYS, AND HOISTS, INCLUDING OVERHEAD CRANES. This equipment is to be performance tested with a test load weighing 110 percent of the rated load. In testing cableways, the test load is to be traveled to the upstream and downstream limits of travel and thoroughly performance tested in at least three travel positions, including both limits of travel.

5.4.4. BOOM ANGLE INDICATOR. Power cranes (includes draglines) with booms capable of moving in the vertical plane shall be provided with a boom angle indicator in good working order.

5.4.5. CRANE TEST CERTIFICATION. The performance test required by 5.4.2 and 5.4.3 is fulfilled if the contractor provides the contracting officer a copy of the certificate of inspection made within the past 12 months by a qualified person or by a government or private agency satisfactory to the contracting officer.

5.4.6. POSTING FOR HIGH VOLTAGE LINES. A notice of the ten foot (or greater) clearance required by OSHA 1926.550, Subpart N, shall be posted in the operator's cab of cranes, shovels, boom-type concrete pumps, backhoes, and related equipment.

5.4.7. BOOM STOPS. Cranes or derricks with cable-supported booms, except draglines, shall have a device attached between the gantry of the A-frame and the boom chords to limit the elevation of the boom. The device shall control the vertical motions of the boom with increasing resistance from 83 or less, until completely stopping the boom at not over 87 above horizontal.

5.4.8. SAFETY HOOKS. Hooks used in hoisting personnel or hoisting loads over construction personnel or in the immediate vicinity of construction personnel shall be forged steel equipped with safety keepers. When shackles are used under these conditions, they shall be of the locking type or have the pin secured to prohibit turning.

5.5 ROLLOVER PROTECTIVE STRUCTURES (ROPS)

5.5.1 ROLLOVER PROTECTIVE STRUCTURES. OSHA 1926, Subpart W, Overhead Protection, Sections 1000 and 1002 are applicable regardless of the year in which the equipment was manufactured and regardless of the struck capacity of the equipment.

5.5.2 EQUIPMENT REQUIRING ROPS. The requirement for ROPS meeting 5.5.1 above applies to crawler and rubber-tired tractors such as dozers, push-and-pull tractors, winch tractors, tractors with backhoes, and mowers; off-highway, self-propelled, pneumatic-tired earth movers, including scrapers, motor graders and loaders; and rollers, compactors, and water tankers (excluding trucks with cabs). These requirements shall also apply to agricultural and industrial tractors and similar equipment.

5.5.3 EQUIPMENT REQUIRING SEATBELTS. The requirements for seatbelts as specified in OSHA Subpart O, Motor Vehicles, Mechanized Equipment, and Marine Operations, Section 1926,602 shall also apply to self-propelled compactors and rollers, and rubber-tired skid-steer equipment.

5.6 LADDERS AND SCAFFOLDING.

5.6.1 LADDERS. OSHA 1926, Subpart L-Section 450. Ladders shall be used as work platforms only when use of small hand tools or handling of light material is involved. No work requiring lifting of heavy materials or substantial exertion shall be done from ladders.

5.6.2 SCAFFOLDING. OSHA 1926, Subpart L--Section 451. Scaffolds, platforms or temporary floors shall be provided for all work except that which can be done safely from the ground or similar footing.

5.6.3 SAFETY BELTS, LIFELINE, AND LANYARDS. OSHA 1926, Subpart E, Section 104. Lifelines, safety belts and lanyards independently attached or attended, shall be used when

80-0614 24 Forestry and Land Management Services [12]

REGISTER OF WAGE DETERMINATIONS UNDER THE SERVICE CONTRACT ACT
By direction of the Secretary of Labor

U.S. DEPARTMENT OF LABOR
EMPLOYMENT STANDARDS ADMINISTRATION
WAGE AND HOUR DIVISION
WASHINGTON, D.C. 20210

William W. Gross
Director

Division of Wage Determinations

Wage Determination No: 1980-0614
Revision No: 24
Date Of Revision: 06/23/2005

State: Louisiana
Area: Louisiana Statewide

Fringe Benefits Required Follow the Occupational Listing

Employed on service contracts for forestry, land management, the cleaning of public use areas and timber inventory services.

OCCUPATION CODE - TITLE	MINIMUM WAGE RATE
08010 - Brush/Precommercial Thinner	10.65
08040 - Choker Setter	9.80
08070 - Faller/Bucker	12.27
08100 - Fire Lookout	10.65
08130 - Forestry Equipment Operator	13.48
08160 - Forestry/Logging Heavy Equipment Operator	15.58
08190 - Forestry Technician	15.58
08190 - Forestry Truckdriver	15.58
08250 - General Forestry Laborer	9.37
08280 - Nursery Specialist	14.77
08310 - Slash Piler/Burner	10.65
08340 - Tree Climber	11.92
08370 - Tree Planter	8.70
08400 - Tree Planter, Mechanical	8.70

ALL OCCUPATIONS LISTED ABOVE RECEIVE THE FOLLOWING BENEFITS:

HEALTH & WELFARE: $2.87 an hour or $114.80 a week or $497.47 a month

VACATION: 2 weeks paid vacation after 1 year of service with a contractor or successor; and 3 weeks after 10 years. Length of service includes the whole span of continuous service with the present contractor or successor, wherever employed, and with the predecessor contractors in the performance of similar work at the same Federal facility. (Reg. 29 CFR 4.173)

HOLIDAYS: A minimum of ten paid holidays per year: New Year's Day, Martin Luther King Jr.'s Birthday, Washington's Birthday, Memorial Day, Independence Day, Labor Day, Columbus Day, Veterans' Day, Thanksgiving Day, and Christmas Day. (A contractor may substitute for any of the named holidays another day off with pay

the fringe benefits as are determined. Such conforming process shall be initiated by the contractor prior to the performance of contract work by such unlisted class(es) of employees. The conformed classification, wage rate, and/or fringe benefits shall be retroactive to the commencement date of the contract. (See Section 4.6 (C)(vi)) When multiple wage determinations are included in a contract, a separate SF 1444 should be prepared for each wage determination to which a class(es) is to be conformed.

The process for preparing a conformance request is as follows:

1) When preparing the bid, the contractor identifies the need for a conformed occupation(s) and computes a proposed rate(s).

2) After contract award, the contractor prepares a written report listing in order proposed classification title(s), a Federal grade equivalency (FGE) for each proposed classification(s), job description(s), and rationale for proposed wage rate(s), including information regarding the agreement or disagreement of the authorized representative of the employees involved, or where there is no authorized representative, the employees themselves. This report should be submitted to the contracting officer no later than 30 days after such unlisted class(es) of employees performs any contract work.

3) The contracting officer reviews the proposed action and promptly submits a report of the action, together with the agency's recommendations and pertinent information including the position of the contractor and the employees, to the Wage and Hour Division, Employment Standards Administration, U.S. Department of Labor, for review. (See section 4.6(b)(2) of Regulations 29 CFR Part 4).

4) Within 30 days of receipt, the Wage and Hour Division approves, modifies, or disapproves the action via transmittal to the agency contracting officer, or notifies the contracting officer that additional time will be required to process the request.

5) The contracting officer transmits the Wage and Hour decision to the contractor.

6) The contractor informs the affected employees.

Information required by the Regulations must be submitted on SF 1444 or bond paper.

When preparing a conformance request, the "Service Contract Act Directory of Occupations" (the Directory) should be used to compare job definitions to insure that duties requested are not performed by a classification already listed in the wage determination. Remember, it is not the job title, but the required tasks that determine whether a class is included in an established wage determination. Conformances may not be used to artificially split, combine, or subdivide classifications listed in the wage determination.

FOR AGENCY USE ONLY

UNITED STATES DEPARTMENT OF AGRICULTURE
PURCHASE ORDER

1 PAGE NO	2 RECEIVING OFFICE NO	3 CONTRACT NUMBER	4 ORDER DATE	5 SF 1081	6 LIMIT CODE	7 FUND CODE	8 ORDER NUMBER	9 SUB
1 OF 1		53-7217-05-004						

10a TYPE PURCHASE (Check One): [X] PURCHASE ORDER [ ] DELIVERY ORDER

10b SELLER'S IDENT. NO

10c FORM 1099: [ ] NO [ ] YES ▶

10d TAXPAYER'S IDENT. NO. [redacted]

10 TO (Seller's Name, Address, City, State, Zip Code, and Phone No.)

~~Pope Ranch~~ Ron Pope
3045 Bufkin Creek Rd
Franklinton, LA 70438

11 SHIP TO ▶ Consignee, Address, Zip Code, and Place of Inspection and Acceptance

PHONE (AC & No.) Deliver Date ▶ ▶ [ ] FTS ▶ [ ] COMM

12 LINE ITEM	13 NEW CODE	14 DESCRIPTION	15 PURCHASE (DELIVERY)	16 ACC LINE	17 QUANTITY	18 UNIT (ISSUE)	19 UNIT PRICE	20 AMOUNT
1		Dig Hole + dispose of dead cattle DAW attached Specifications			1	JB	1100.00	1100.00

20a THIS PURCHASE ORDER NEGOTIATED PURSUANT TO AUTHORITY OF 41 U.S.C. 253(c)

21 F.O.B. POINT	22 DISCOUNT AND/OR NET PAYMENT TERMS	22a TYPE COMMODITY PAYMENT CODE ▶	Sub-Total ▶	26 1,100.00
23 DELIVER TO F.O.B. POINT ON OR BEFORE (Date)	24 SHIP VIA	25 ESTIMATED FREIGHT	TOTAL ▶	27 1,102.00

28 ACC LINE	29 ACCOUNTING CLASSIFICATION A	B	C	D	E	30 DISTRIBUTION	31 AMOUNT
1	6	10	5	3	4	1 4 1 2	2

31a ISSUING OFFICE NAME AND ADDRESS

32a INSPECTED (Name and Title) [signature] 6/2/05

32b SHIPPED FROM (Street, City, State, and Number) 32c SHIPPER'S PHONE NO.

33a AUTHORIZED SIGNATURE [signature]

This form was electronically produced by Elite Federal Forms, Inc./ATS 3/1/96

FORM AD-632-T (REV. 7/90)

To: Natural Resources Conservation Service

I/We Lazy Brothers Dairy LLC affirm that I/We are the owner(s) of the property for which the assistance indicated below is requested. We the Landowners of said property hereby request that the United States Department of Agriculture/Natural Resources Conservation Service (USDA/NRCS) dispose of all dead animals on my property as a result of Hurricane Katrina on August 29, 2005.

I/We do give USDA/NRCS permission to dispose of the animals on my property.

Randall O Lazy 8/Sept/05

Signature Date

RON POPE EST | 9/8/05

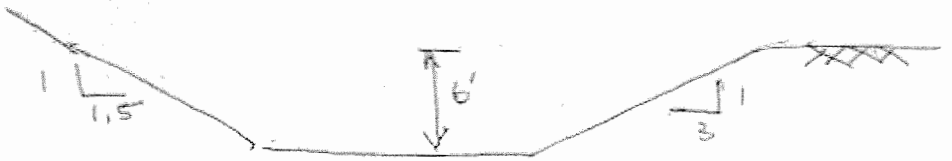

PROFILE

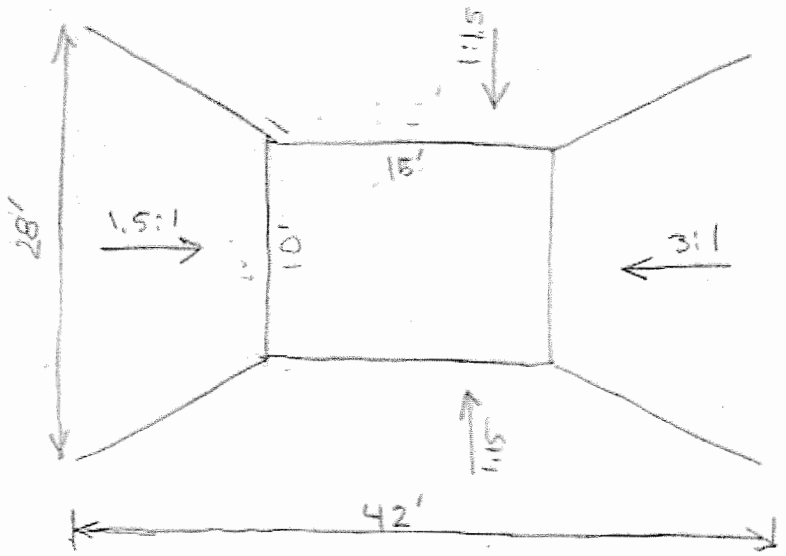

PLAN VIEW

Vol = 148 CY ÷ 20 CY/hr = 7 hrs x $100/hr = $700.00

SEED = 0.25 ACRE x $100/ACRE = $25.00

FENCE $0.98 x 500 x 0.25 = $122.50

LIME = $7/bag x 10 bags = $70.00

$917.50

PROFIT & OVERHEAD 25% + 229.38

1146.88

The burial pit shall be a minimum of 6' deep below normal ground with side slopes as per attached drawing. The bottom shall be large enough to place the dead cattle side by side and/or end to end without stacking. The dead cattle shall be treated with lime at a rat of 100#/animal. Then the pit shall be fill with the excavated earth to a minimum of 2' above normal ground. The TOP and slopes shall be blade dressed and left in such condition to allow for drainage away from pit area. All disturbed areas shall be seeded with ryegrass at a rate of 50 #/ac.

The pit bottom shall have a minimum of 2' of impervious material below the finished bottom grade and the initial 2' of fill shall be impervious material.

RON POPE EST | 9/8/05

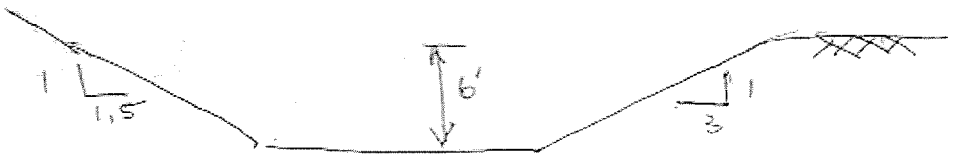

PROFILE

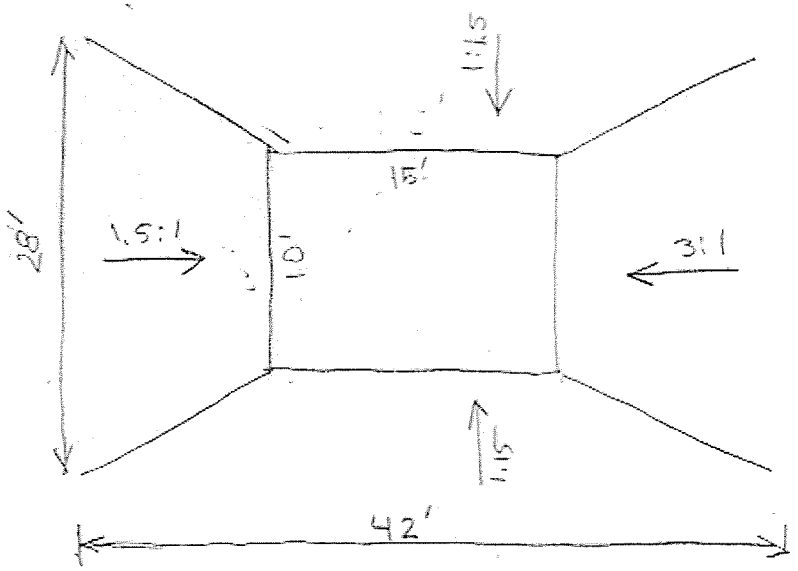

PLAN VIEW

Vol = 148 CY ÷ 20 CY/hr = 7 hrs x $100/hr = $700.00

SEED = 0.25 ACRE x $100/ACRE = $25.00

FERT $0.98 x 500 x 0.25 = $122.50

LIME = $7/bag x 10 bags = $70.00

$917.50

PROFIT & OVERHEAD 25% 229.38

1146.88