High performance. Delivered.

Enterprise Application Integration Technical Overview

November 3, 2003

Bruce Kingsley

Agenda

- EAI Support for Enterprise Modernization
- EAI Interface Development Process
- EAI Conceptual Architecture
- Example Bulk Data Transfer
- File Distribution Interface
- Financial System Interface
- XML Transformation
- High Performance Web Architecture
- Web Architecture with Transformation
- FSA Production Architecture

EAI Architecture is Fundamental to Enterprise Modernization Strategy

System Integration	**Provides messaging infrastructure for integration of existing legacy systems, modernization initiatives, COTS applications, data warehouses, and web-based solutions.**
Incremental Modernization	**Individual components can be modernized one at a time and still function properly within the overall business context.** - Reduced risk - More rapid benefit realization - “Build a Little, Test a Little” approach
Data Consistency	**Provides a capability that can be used to coordinate data across systems.** - Improve consistency - Reduce redundancy
Cost Efficiency	**The cost savings associated with this integrated approach are accrued to the modernization initiatives that utilize the EAI infrastructure.**

EAI Team Interface Development Process

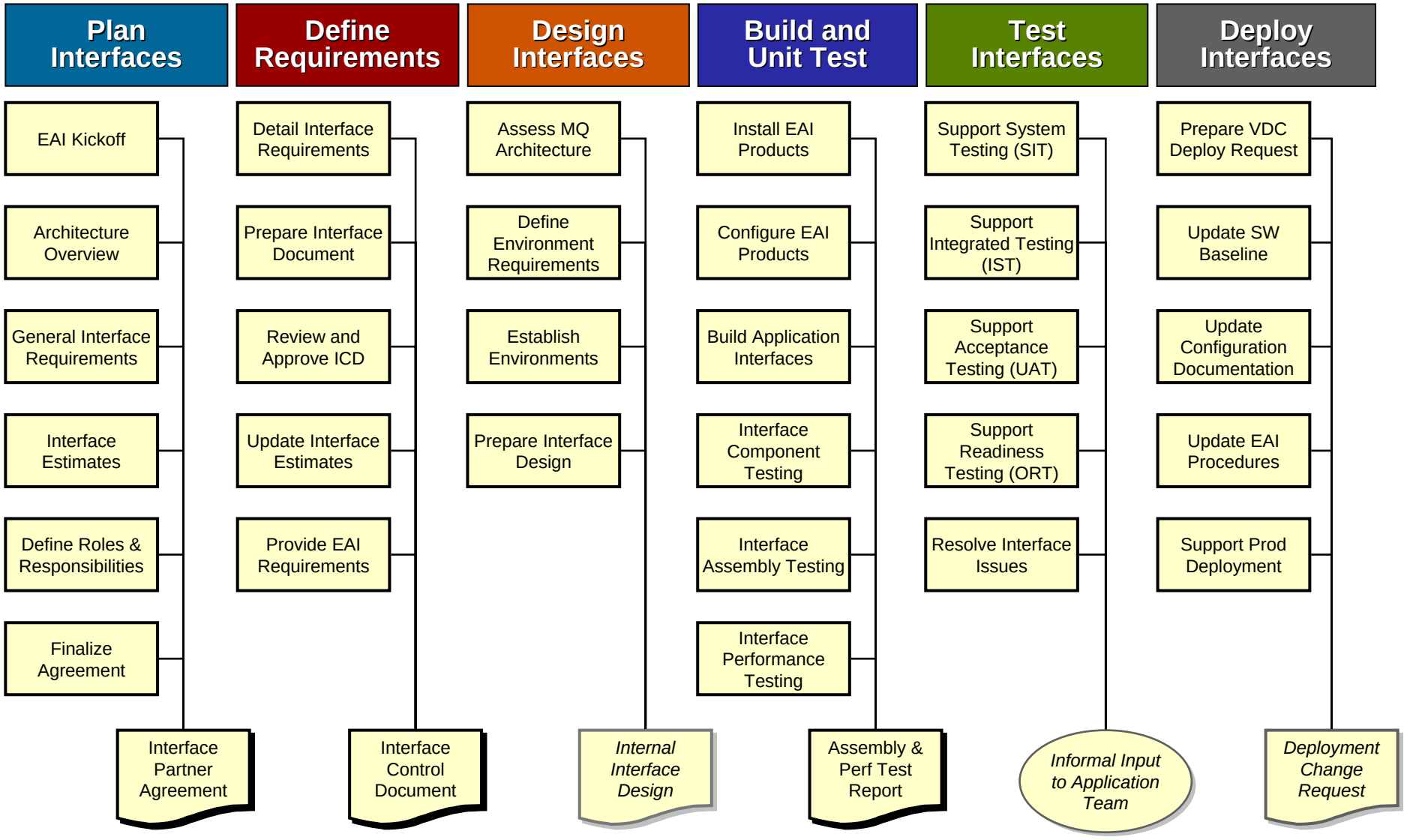

EAI Conceptual Architecture

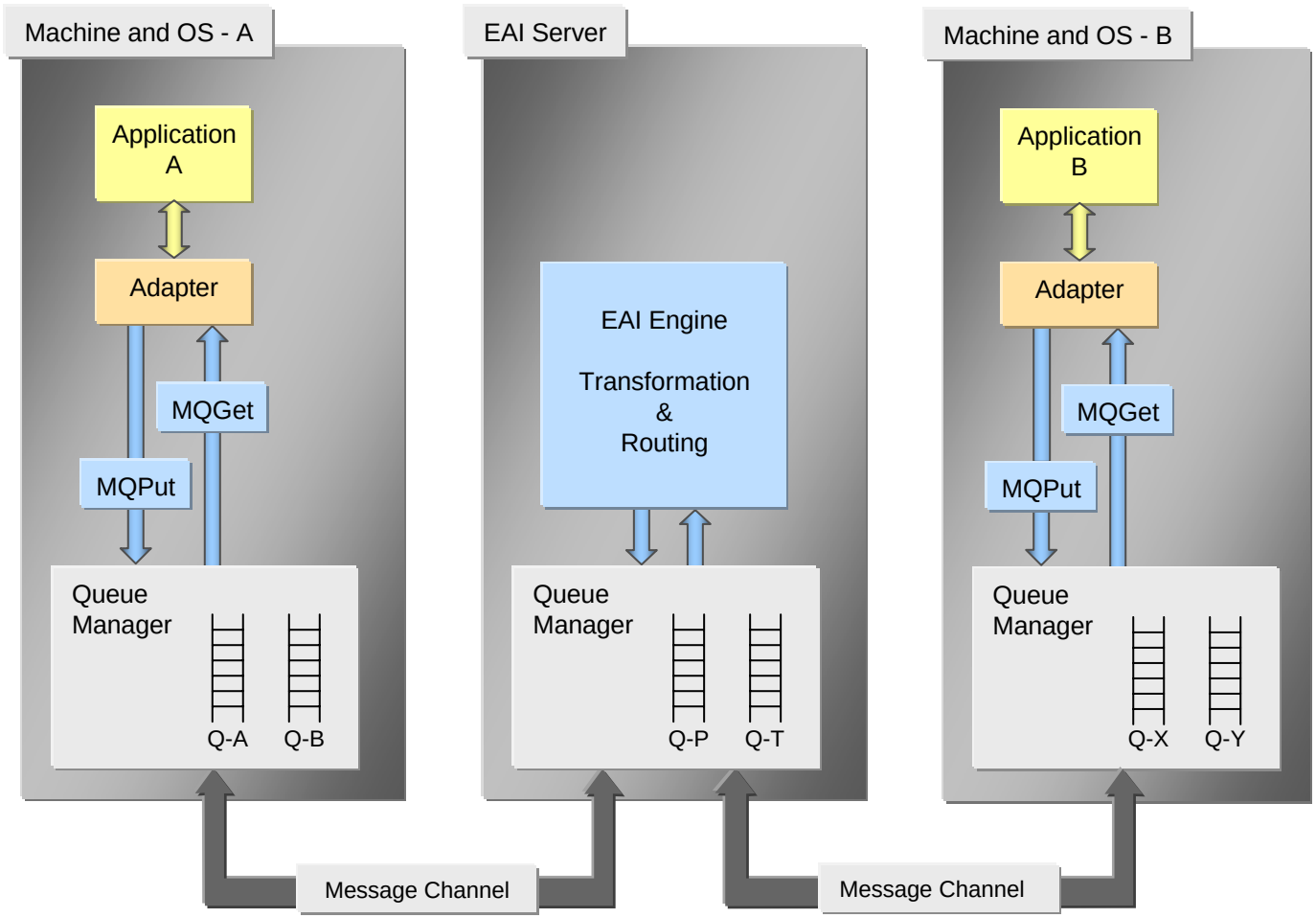

Example Bulk Data Transfer

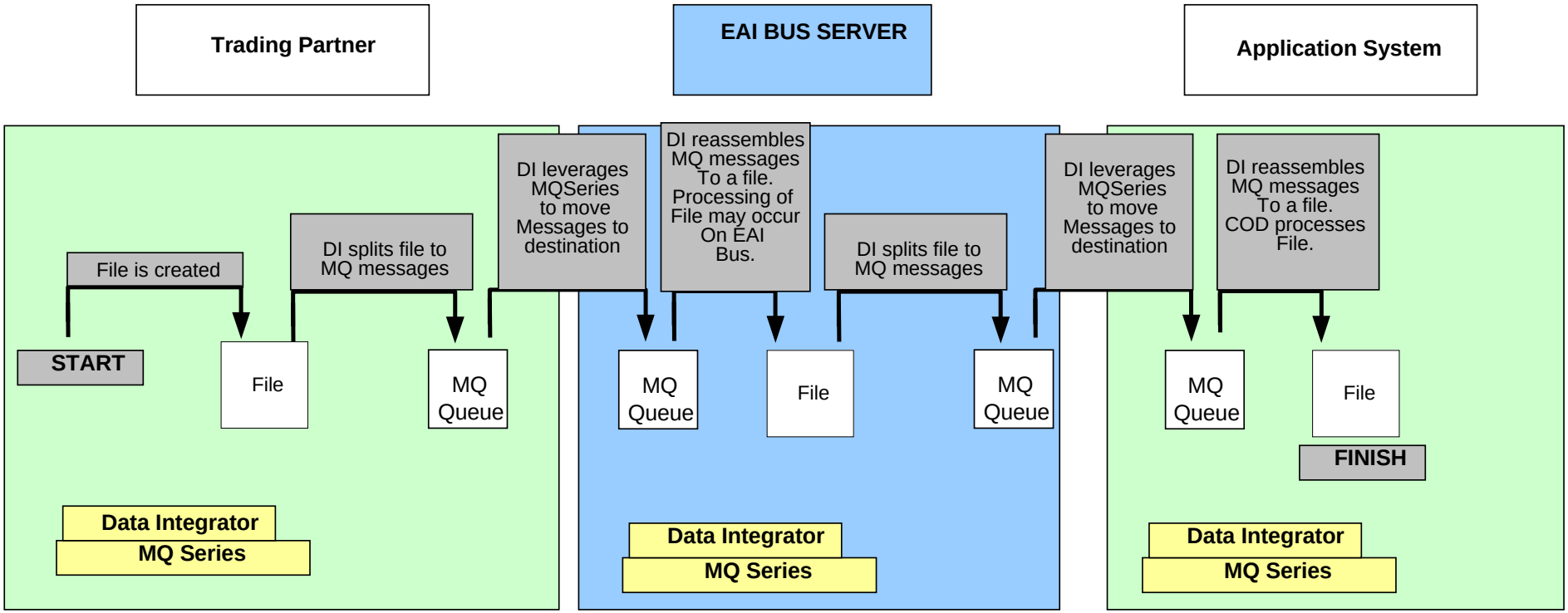

File Distribution Example

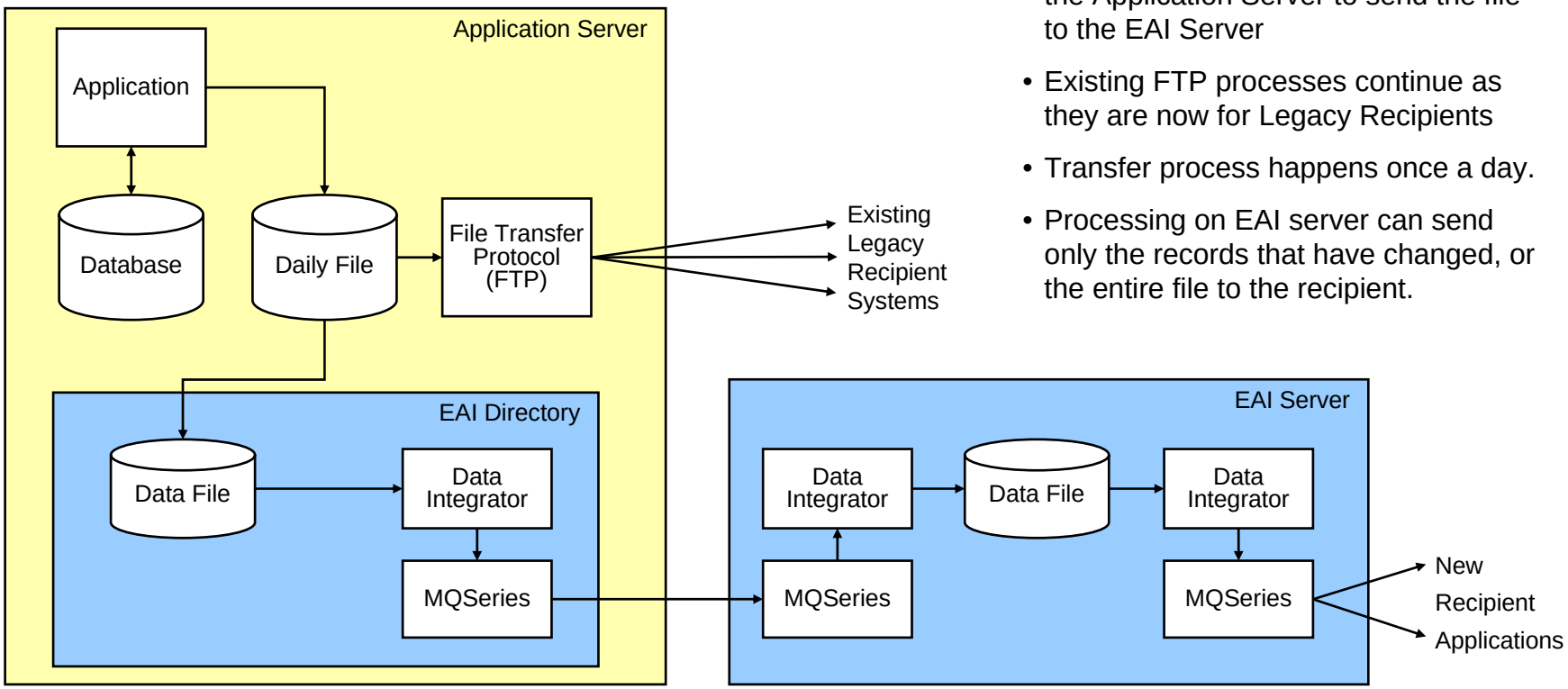

- Copy of Daily File is placed in the EAI directory whenever a new file is produced
- Data Integrator and MQSeries run on the Application Server to send the file to the EAI Server
- Existing FTP processes continue as they are now for Legacy Recipients
- Transfer process happens once a day.
- Processing on EAI server can send only the records that have changed, or the entire file to the recipient.

Financial System Example Interface

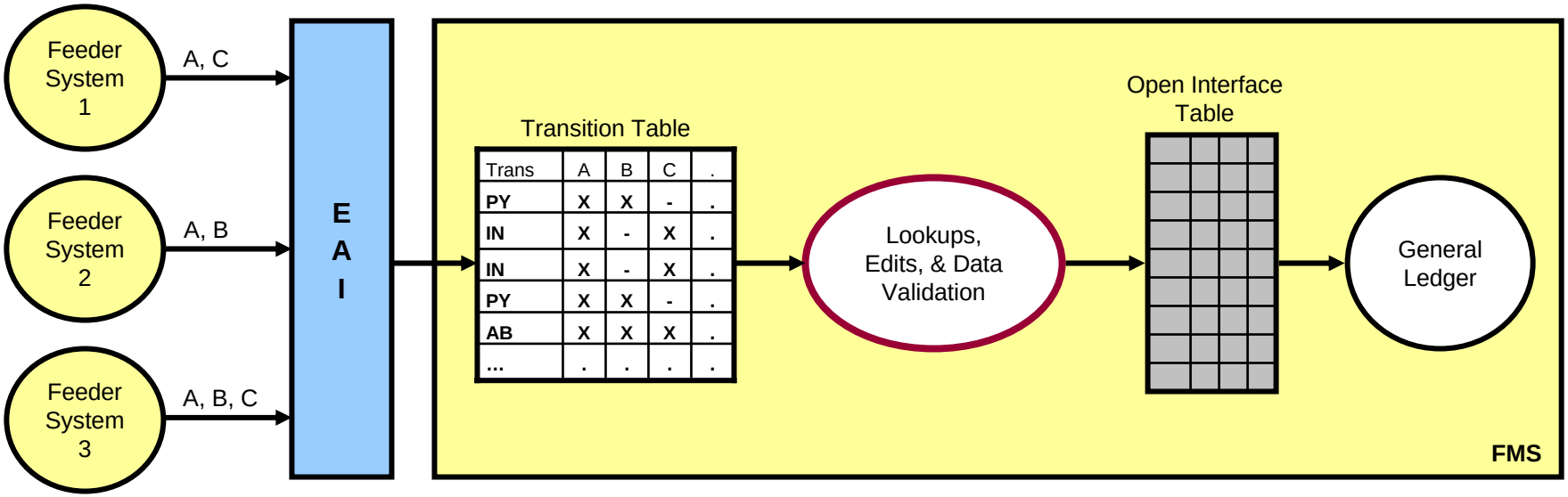

Feeder Systems	EAI	Transition Table	Data Loading	OI Table	Financial Module
• Provide data according to own format • Different systems may provide different data elements	• Routes data to appropriate Transition Table and Column • Converts data formats as necessary • Validates basic data formats	• Contains columns for all possible data elements • Source system is implied by the data	• Performs feeder specific processing • Performs table lookups • Performs data validation and edits	• Presents input data for Module processing • One Open Interface Table for each FMS Module	• One Module each for General Ledger, Accounts Payable, Accounts Receivable

EAI Bus Transformation to support Legacy formats for XML data migration

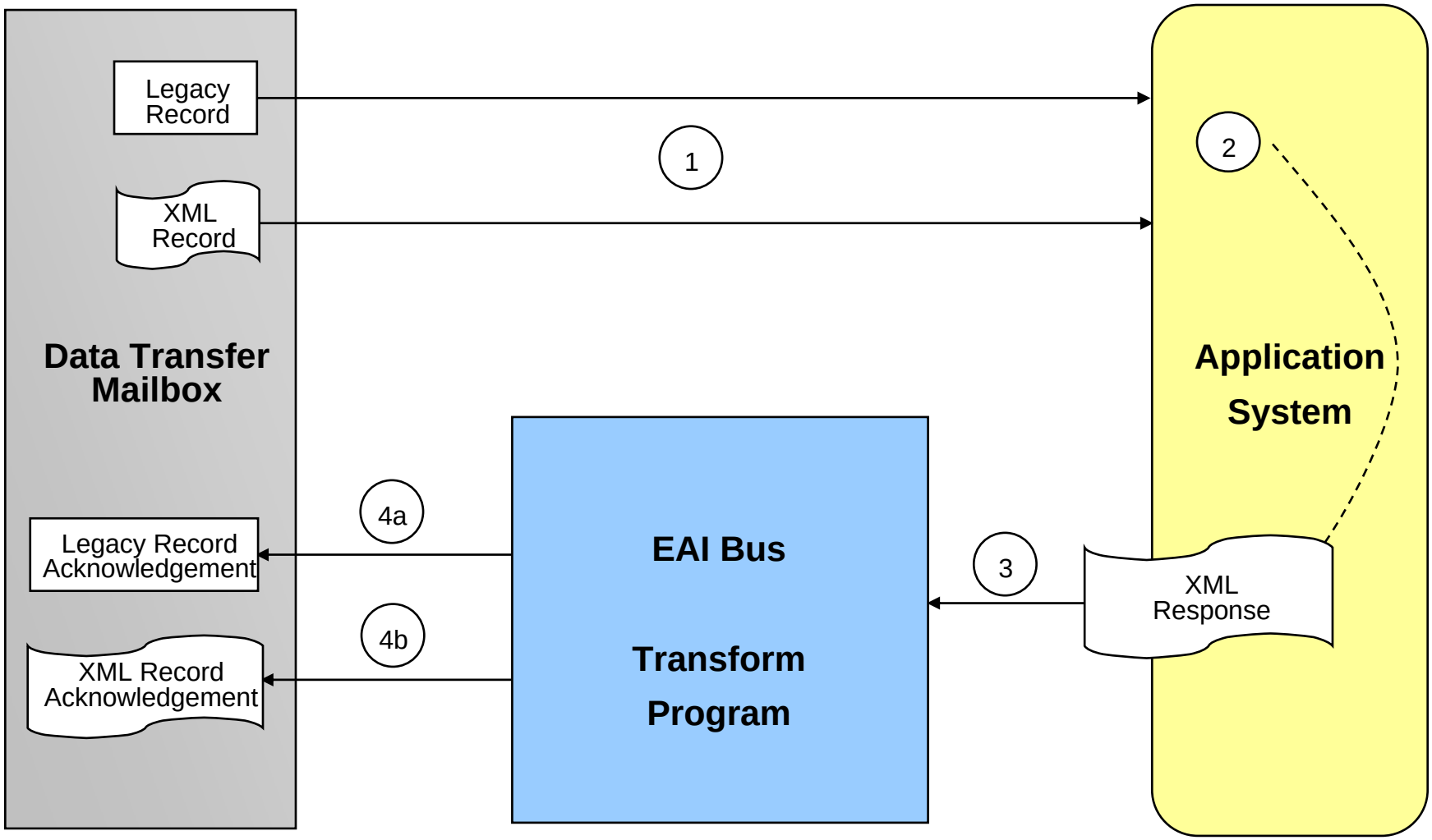

High Performance Web Application Interface to Mainframe Backend

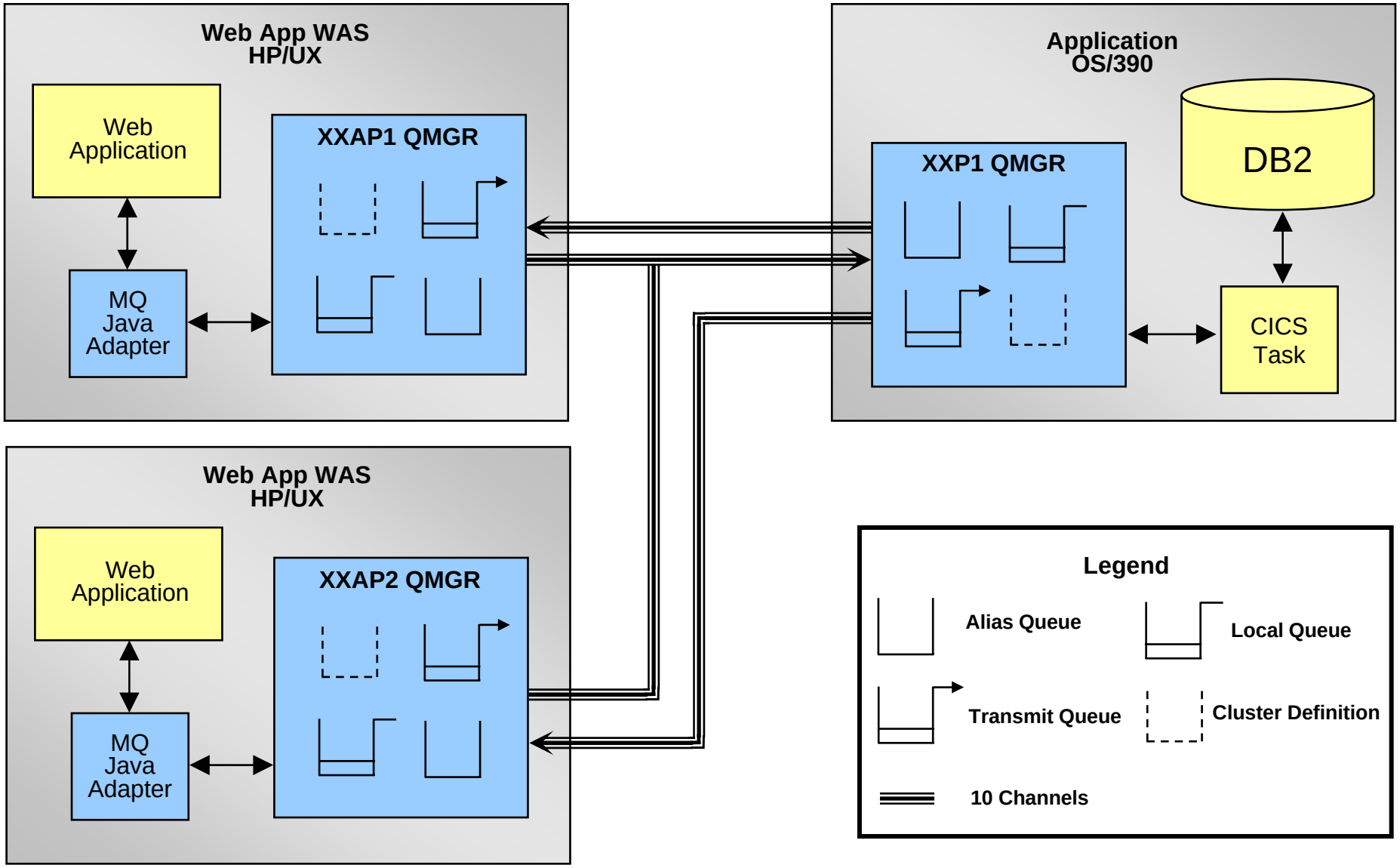

Web Application with Message Transformation and Interface to Mainframe Backend

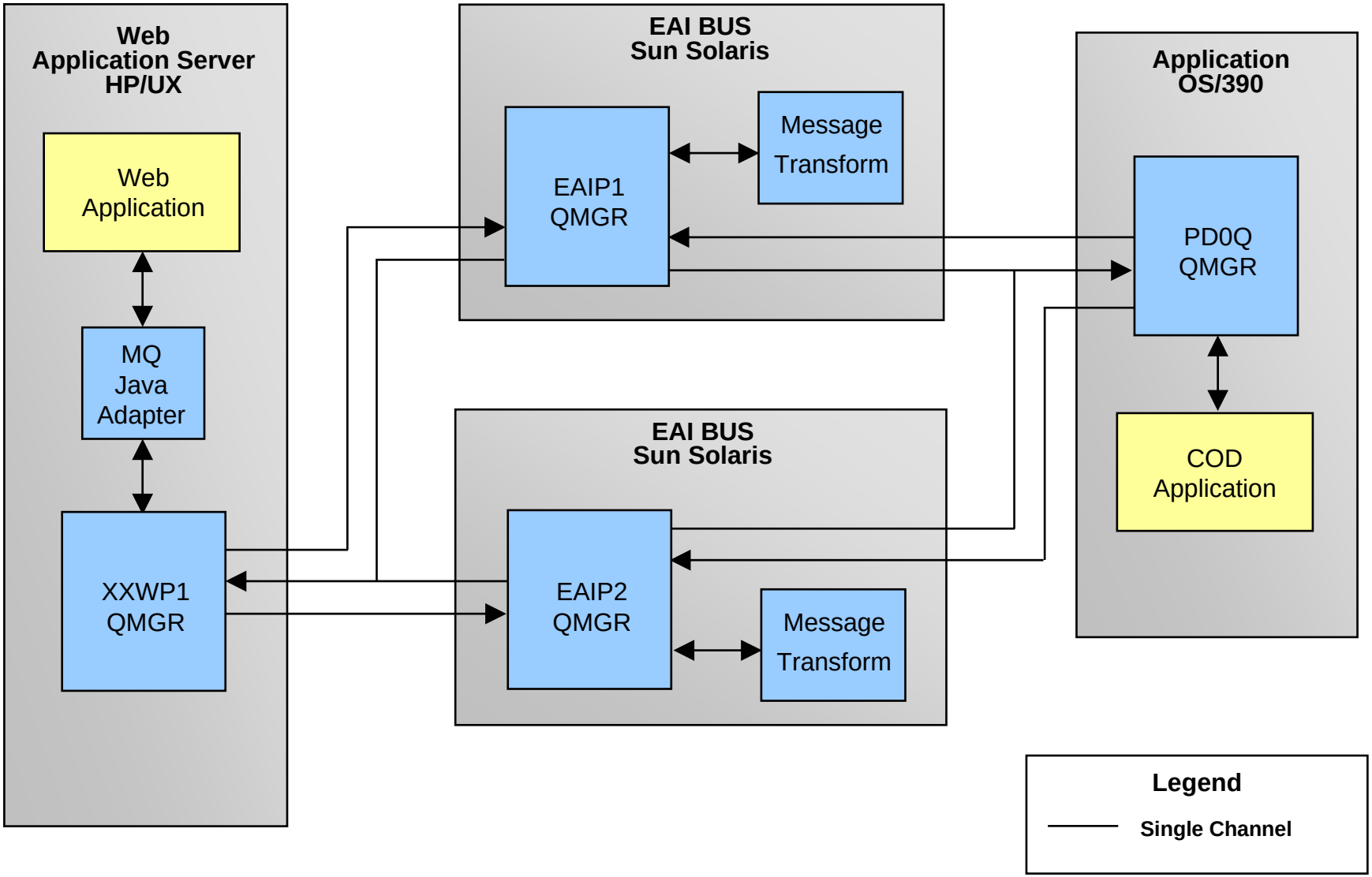

EAI Production Environment

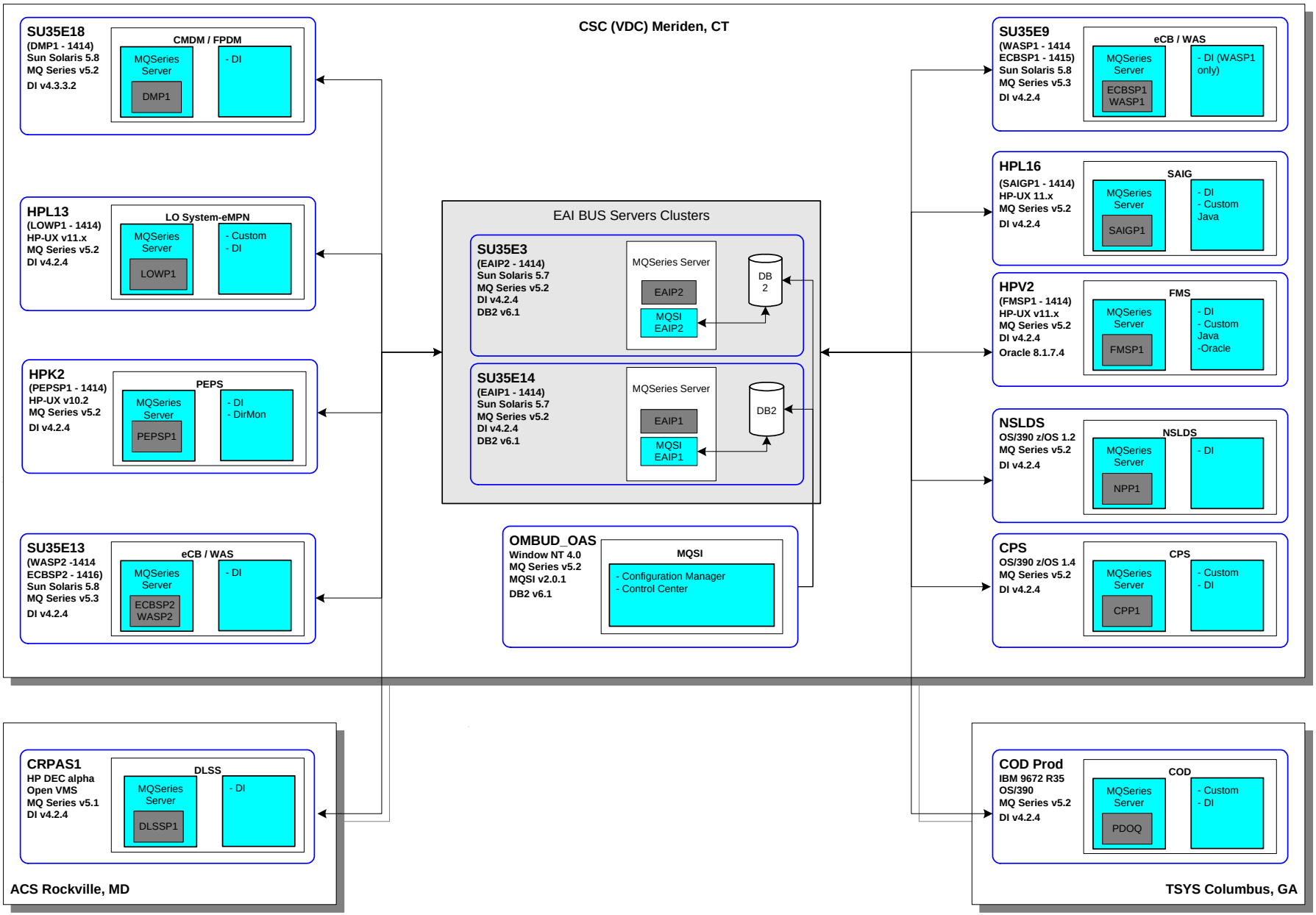
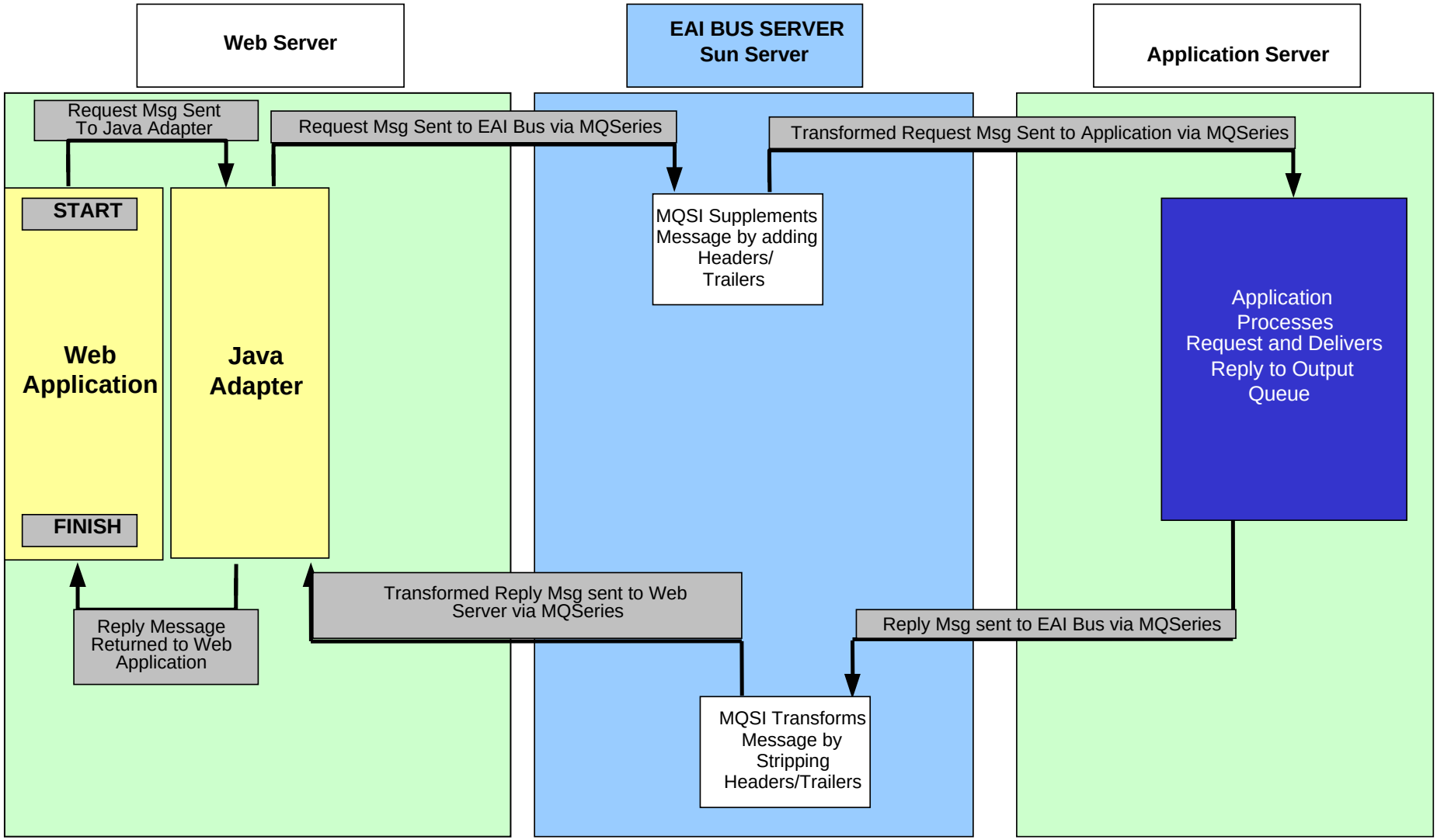
Example Transactional Interface